Polo 1995 ➤

5-Speed manual gearbox 02J

Gearbox ID	ESP	EXB							

Edition 10.1999

Protected by copyright. Copying for private or commercial purposes, in part or whole, is not permitted unless authorised by Volkswagen AG. Volkswagen AG does not guarantee or accept any liability with respect to the correctness of information in this document. Copyright by Volkswagen AG.

satelettronica

List of Workshop Manual Repair GroupsList of Workshop Manual Repair GroupsList of Workshop Manual Repair Groups

Polo 1995 ➤

5-Speed manual gearbox 02J

Repair Group

00 - Technical data
30 - Clutch
34 - Controls, Housing
35 - Gears, Shafts
39 - Final drive, Differential rear

Protected by copyright. Copying for private or commercial purposes, in part or in whole, is not permitted unless authorised by Volkswagen AG. Volkswagen AG does not guarantee or accept any liability with respect to the correctness of information in this document. Copyright by Volkswagen AG.
satelettronica

Technical information should always be available to the foremen and mechanics, because their careful and constant adherence to the instructions is essential to ensure vehicle road-worthiness and safety. In addition, the normal basic safety precautions for working on motor vehicles must, as a matter of course, be observed.

All rights reserved.
No reproduction without prior agreement from publisher.

Copyright © 2010 Volkswagen AG, Wolfsburg

Contents

00 - Technical data . . . 1
1 Gearbox identification . . . 1
1.1 Gearbox identification . . . 1
1.2 Code letters, gearbox allocation, ratios, capacities . . . 2
2 Transmission layout . . . 3
2.1 Transmission layout . . . 3
3 Calculating overall ratio "i" . . . 5
3.1 Calculating overall ratio "i" . . . 5
4 General repair instructions . . . 5
4.1 General repair instructions . . . 5

30 - Clutch . . . 8
1 Servicing clutch control . . . 8
1.1 Servicing clutch control . . . 8
1.2 Assembly overview - Pedal cluster . . . 9
1.3 Removing and installing clutch pedal . . . 13
1.4 Removing and installing over-centre spring . . . 16
1.5 Assembly overview - Hydraulic system . . . 18
1.6 Removing and installing master cylinder . . . 21
1.7 Bleeding clutch system . . . 25
2 Servicing clutch release mechanism . . . 26
2.1 Servicing clutch release mechanism . . . 26
3 Servicing clutch . . . 29
3.1 Servicing clutch . . . 29

34 - Controls, Housing . . . 34
1 Servicing gear selector mechanism . . . 34
1.1 Servicing gear selector mechanism . . . 34
1.2 Installation position of gear selector mechanism . . . 34
1.3 Removing and installing selector lever knob and gaiter . . . 37
1.4 Servicing gear stick and gear stick housing . . . 39
1.5 Assembly overview - removing and installing selector cables . . . 43
1.6 Removing and installing gear selector mechanism . . . 46
1.7 Adjusting gear selector mechanism . . . 48
2 Removing and installing gearbox . . . 52
2.1 Removing and installing gearbox . . . 52
3 Checking gear oil . . . 67
3.1 Checking gear oil . . . 67
4 Dismantling and assembling gearbox . . . 68
4.1 Dismantling and assembling gearbox . . . 68
4.2 Overview . . . 68
4.3 Assembly overview . . . 70
4.4 Removing and installing cover for gearbox housing and 5th gear . . . 71
4.5 Removing and installing gearbox housing and selector mechanism . . . 74
4.6 Removing and installing input shaft, output shaft (pinion shaft), differential and selector forks . . . 76
4.7 Assembly sequence . . . 79
5 Servicing gearbox housing and clutch housing . . . 97
5.1 Servicing gearbox housing and clutch housing . . . 97
6 Dismantling and assembling gearbox selector mechanism . . . 107
6.1 Dismantling and assembling gearbox selector mechanism . . . 107
7 Dismantling and assembling selector forks . . . 113

satelettronica

7.1 Dismantling and assembling selector forks 113

35 - Gears, Shafts 120

1 Dismantling and assembling input shaft 120
1.1 Dismantling and assembling input shaft 120

2 Adjusting input shaft 133
2.1 Adjusting input shaft 133
2.2 Table of adjustment shims 135
2.3 Performing measurement check 137

3 Dismantling and assembling output shaft 138
3.1 Dismantling and assembling output shaft 138
3.2 From gearbox build date 04 09 0 the synchronisation for 1st gear has been modified 164

4 Adjusting output shaft 168
4.1 Adjusting output shaft 168

5 Dismantling and assembling reverse shaft 171
5.1 Dismantling and assembling reverse shaft 171

39 - Final drive, Differential rear 176

1 Renewing oil seals for flanged shafts 176
1.1 Renewing oil seals for flanged shafts 176
1.2 Renewing oil seal for left flanged shaft 176
1.3 Renewing oil seal for right flanged shaft 179

2 Dismantling and assembling differential 182
2.1 Dismantling and assembling differential 182

3 Adjustment overview 195
3.1 Adjustment overview 195

4 Adjusting differential 196
4.1 Adjusting differential 196

Protected by copyright. Copying for private or commercial purposes, in part or in whole, is not permitted unless authorised by Volkswagen AG. Volkswagen AG does not guarantee or accept any liability with respect to the correctness of information in this document. Copyright by Volkswagen AG.
satelettronica

00 - Technical data

1 - Gearbox identification

1.1 - Gearbox identification

The manual gearbox 02J is installed in the Polo 1995 ‣ as a 5 speed gearbox in combination with the 3-Cyl. engine.

Allocation =>Page 2 .

-> Location on gearbox

Code letters and date of manufacture (arrow 1) manual gearbox 02J (arrow 2)

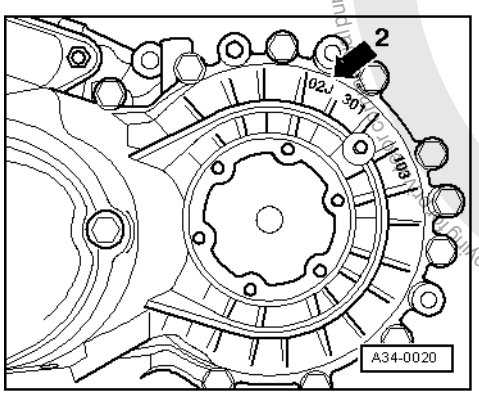

Protected by copyright. Copying for private or commercial purposes, in part or in whole is not permitted unless authorised by Volkswagen AG. Volkswagen AG does not guarantee or accept any liability with respect to the correctness of information in this document. Copyright by Volkswagen AG.
satelettronica

-> Manual gearbox 02J (arrow 2)

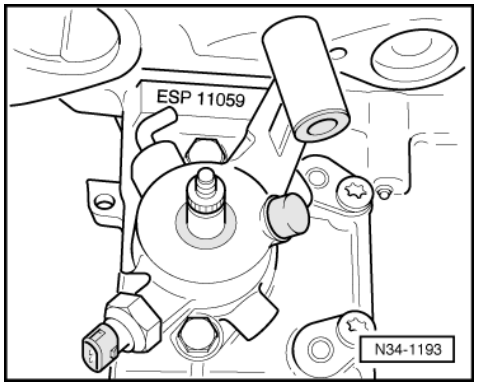

-> Code letters and date of manufacture of gearbox

Example:	ESP	11	05	9
	I	I	I	I
	I	I	I	I
	Code letters	Day	Month	Year (1999) of manufacture

Additional data depends on manufacture.

Note:

The gearbox code letters are also shown on the vehicle identification plates.

1.2 - Code letters, gearbox allocation, ratios, capacities

Manual gearbox		5 speed 02J		
Code letters		ESP	EXB	
Manufactured	from to	05.99 09.00	09.00	
Allocation	Model	Polo 1995 ▸	Polo 1995 ▸	
	Engine	1.4 ltr. - 55 kW Turbodiesel	1.4 ltr. - 55 kW Turbodiesel	
Ratio: Z2 : Z1	Final drive	60 : 19 = 3.158	60 : 19 = 3.158	
	1st gear	33 : 10 = 3.300	33 : 10 = 3.300	
	2nd gear	35 : 18 = 1.944	35 : 18 = 1.944	
	3rd gear	34 : 26 = 1.308	34 : 26 = 1.308	
	4th gear	34 : 35 = 0.971	34 : 35 = 0.971	
	5th gear	34 : 45 = 0.756	34 : 45 = 0.756	
	6th gear	-	-	-
	Reverse gear	17 : 10 x 36 : 20 = 3.060	17 : 10 x 36 : 20 = 3.060	
	Speedometer drive	13 : 22 = 0.591	13 : 22 = 0.591	

From 09.00 modified synchronisation for the 1st gear and modified selector mechanism gearbox side

Code letters	ESP	EXB	

Protected by copyright. Copying for private or commercial purposes, in part or in whole, is not permitted unless authorised by Volkswagen AG. Volkswagen AG does not guarantee or accept any liability with respect to the correctness of information in this document. Copyright by Volkswagen AG.

satelettronica

Capacity	2.0 litres	2.0 litres	
Specification	Gear oil G50 SAE 75W90 (synthetic oil)		
Clutch control	hydraulic	hydraulic	
Clutch plate ø	215 mm	215 mm	
Drive shaft flange ø	108 mm 1)	108 mm 1)	
Overall ratio in top gear	2.387	2.387	

1) Triple roller joint drive shaft

2 - Transmission layout

2.1 - Transmission layout

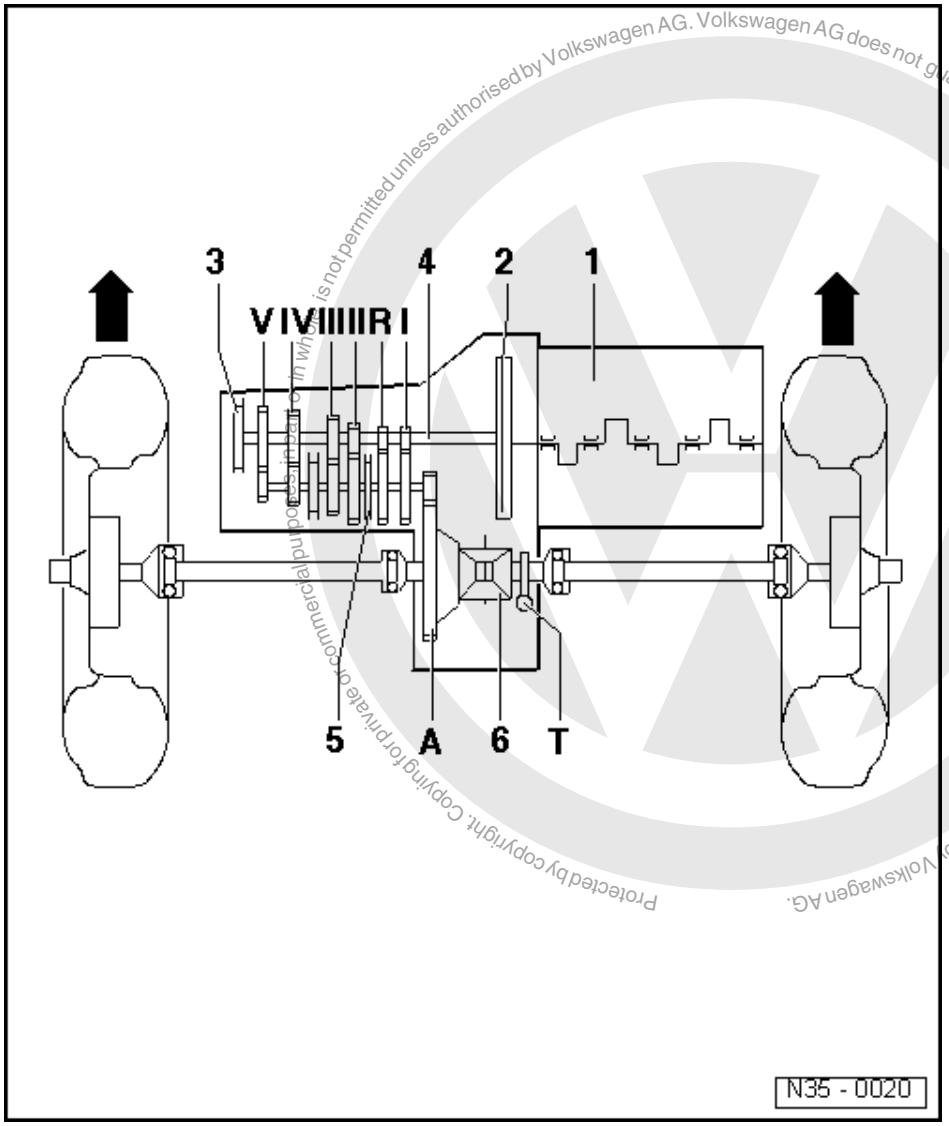

Protected by copyright. Copying for private or commercial purposes, in whole or in part, is not permitted unless authorised by Volkswagen AG. Volkswagen AG does not guarantee or accept any liability with respect to the correctness of information in this document. Copyright by Volkswagen AG.

satelettronica

Designation
1 Engine
2 Clutch
3 Gearbox
4 Input shaft

5 Output shaft/pinion shaft
6 Differential

Arrows point in direction of travel

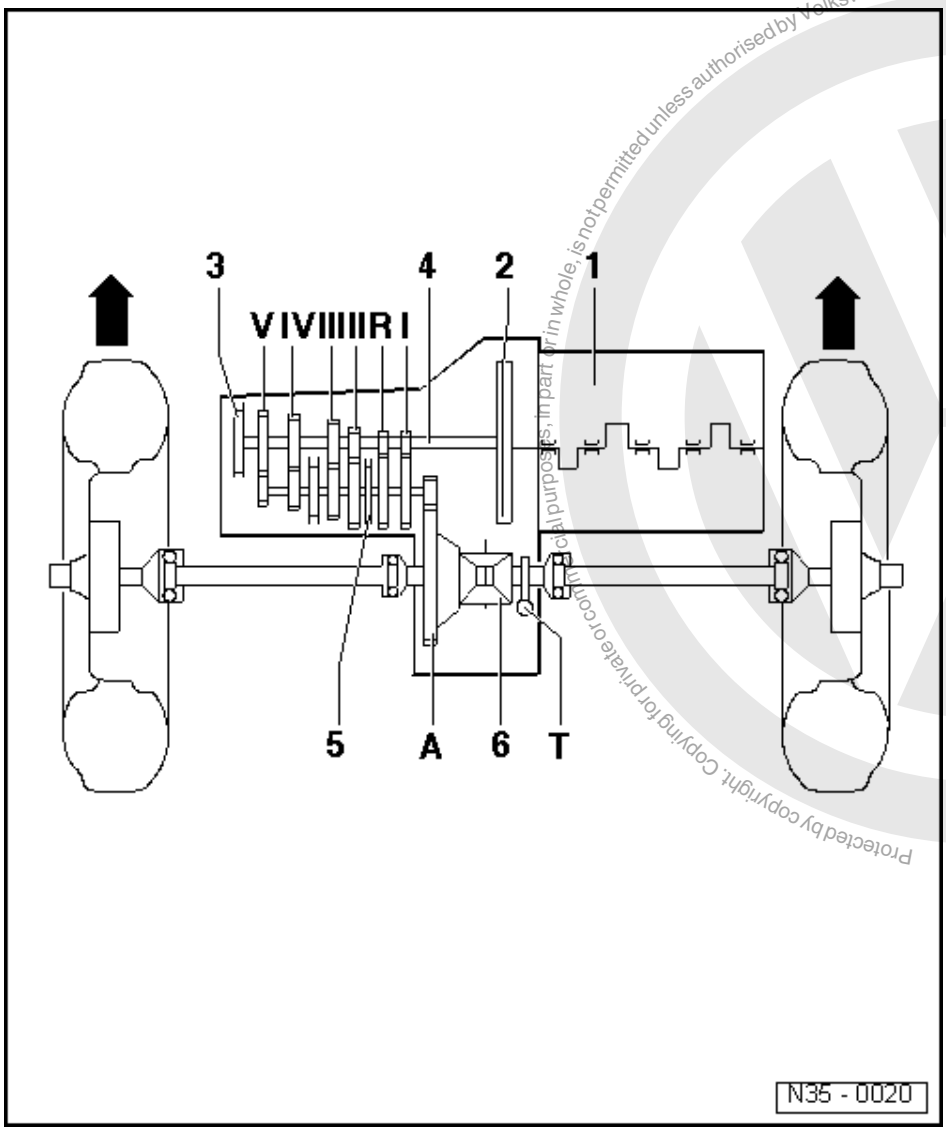

Protected by copyright. Copying for private or commercial purposes, in part or in whole, is not permitted unless authorised by Volkswagen AG. Volkswagen AG does not guarantee or accept any liability with respect to the correctness of information in this document. Copyright by Volkswagen AG.
satelettronica

Gear ratios

I	- 1st gear
II	- 2nd gear
III	- 3rd gear
IV	- 4th gear
V	- 5th gear
R	- Reverse gear
A	- Final drive
T	- Speedometer drive

Arrows point in direction of travel

3 - Calculating overall ratio "i"

3.1 - Calculating overall ratio "i"

Protected by copyright. Copyright by Volkswagen AG. Volkswagen AG does not guarantee or accept any liability with respect to the correctness of information in this document. Copying for private or commercial purposes, in part or in whole, is not permitted unless authorised by Volkswagen AG.

Example:

	5th gear	Final drive
Drive gear	ZG1 = 34	ZA1 = 19
Driven gear	ZG2 = 45	ZA2 = 60

i= Z2/ Z1 1)

iG = Gear ratio = ZG2/ZG1 = 34 / 45 = 0.756

iA = Axle ratio = ZA2 / ZA1 = 60 / 19 = 3.158

iges. = Overall ratio
= iG x iA = 0.756 x 3.158 = 2.387

1) Z1 = No. of teeth driving gear, Z2 = No. of teeth driven gear

4 - General repair instructions

4.1 - General repair instructions

The maximum possible care and cleanliness and proper tools are essential to ensure satisfactory and successful gearbox repairs. The usual basic safety precautions also, naturally apply when carrying out vehicle repairs.

A number of generally valid instructions applicable for the various repair procedures - which were previously repeated a number of times at numerous places in the Workshop Manual - are summarised here. They apply to this Workshop Manual.

Gearbox

- When installing ensure that the dowel sleeves between the engine and gearbox are correctly located.
- When assembling mounting brackets as well as other waxed components the contacts surfaces must be cleaned. Contact surfaces must be free of grease and wax.
- When changing a gearbox fill with gear oil to the lower edge of the filler hole.
- Capacities and specifications => Page 2 .

Gaskets, sealing rings

- Thoroughly clean joint surfaces and apply sealant AMV 188 200 03.
- Apply sealant uniformly but not too thick.

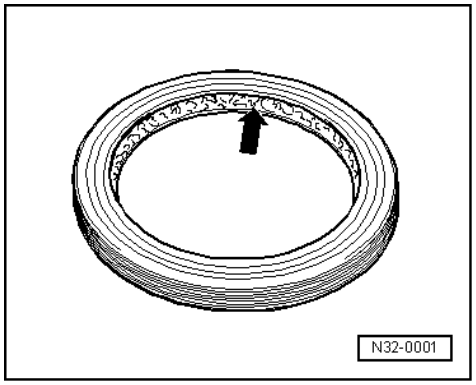

satelettronica

- Renew "O-rings".
- Radial shaft oil seals.

Before installing:

-> Lightly oil outer edge, fill space between sealing lips -arrow- with grease G 052 128 A1.

After installation:

Check gearbox oil; if necessary top-up to lower edge of oil filler hole, specification => Page 2 .

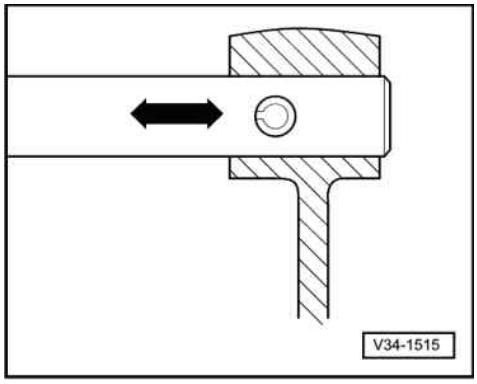

Locking devices

- Renew circlips.
- Do not overstretch circlips.
- Circlips must locate properly in the groove.
- -> Renew spring pins
  Installation position: Slot longitudinal to line of force.

Bolts and nuts

- Tighten and loosen bolts and nuts for securing covers and housings in a diagonal sequence.
- Especially delicate parts, such as clutch pressure plates, must not be distorted. Loosen and tighten nuts and bolts in stages in a diagonal sequence.
- Tightening torques as specified are for unoiled bolts and nuts.
- Renew self-locking bolts and nuts.
- Ensure with screwed connections that the areas of the contact surfaces as well as the visible surfaces of nuts and bolts are rewaxed after assembly, if necessary.

Bearings

- Install new taper roller bearings as supplied and do not lubricate additionally.
- Install needle bearings with lettered side (thicker metal) towards fitting tool.
- Taper roller bearings fitted to one shaft must be renewed as a set. Use same make of bearings.
- Heat inner races to approx. 100 °C before installing.

- Do not interchange outer or inner races of bearings of the same size. The bearings are matched in pairs.

Shims

- Measure shims at several points with a micrometer. Tolerance variations make it possible to find the exact shim thickness required.
- Check for burrs and damage.
- Only install perfect shims.

Synchronizer rings

- Do not interchange. When reusing always fit to the same gear.
- Check for wear and renew if necessary.

Protected by copyright. Copying for private or commercial purposes, in part or in whole, is not permitted unless authorised by Volkswagen AG. Volkswagen AG does not guarantee or accept any liability with respect to the correctness of information in this document. Copyright by Volkswagen AG.
satelettronica

- Coat with gear oil before installing.

Selector gears

- Before installing clean and heat on a hot plate to approx. 100 °C.
- Temperature can be checked with temperature tester V.A.G 1558.

Protected by copyright. Copying for private or commercial purposes, in part or in whole, is not permitted unless authorised by Volkswagen AG. Volkswagen AG does not guarantee or accept any liability with respect to the correctness of information in this document. Copyright by Volkswagen AG.

satelettronica

30 - Clutch

1 - Servicing clutch control

1.1 - Servicing clutch control

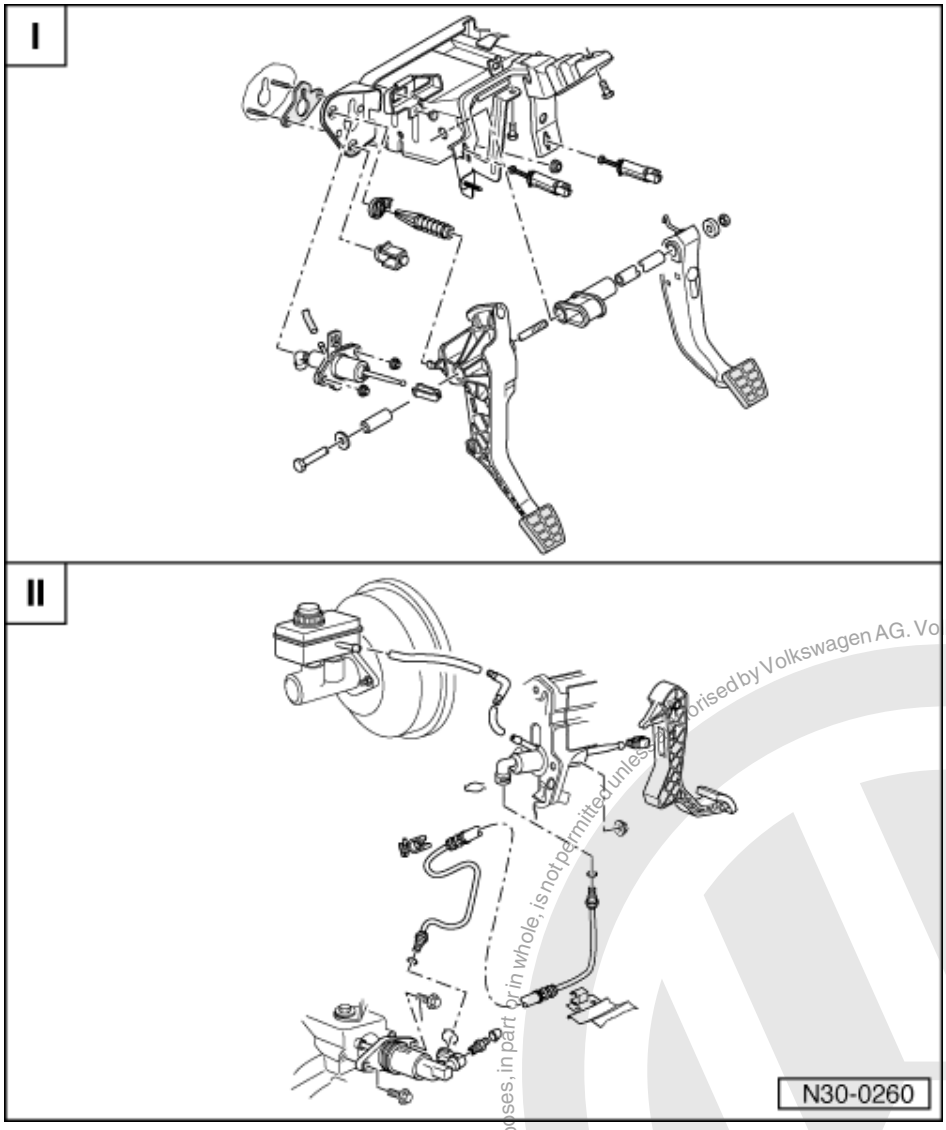

I - Assembly overview - pedal cluster
=>page 9
III - Assembly overview - hydraulics
=>page 18

Notes:

- Disconnect battery earth strap.
- For vehicles with coded radio obtain radio code.
- Lubricate all bearings and contact surfaces with poly resin grease part No. G 052 142 A2.

Protected by copyright. Copying for private or commercial purposes, in part or in whole, is not permitted unless authorised by Volkswagen AG. Volkswagen AG does not guarantee or accept any liability with respect to the correctness of information in this document. Copyright by Volkswagen AG.
satelettronica

1.2 - Assembly overview - Pedal cluster

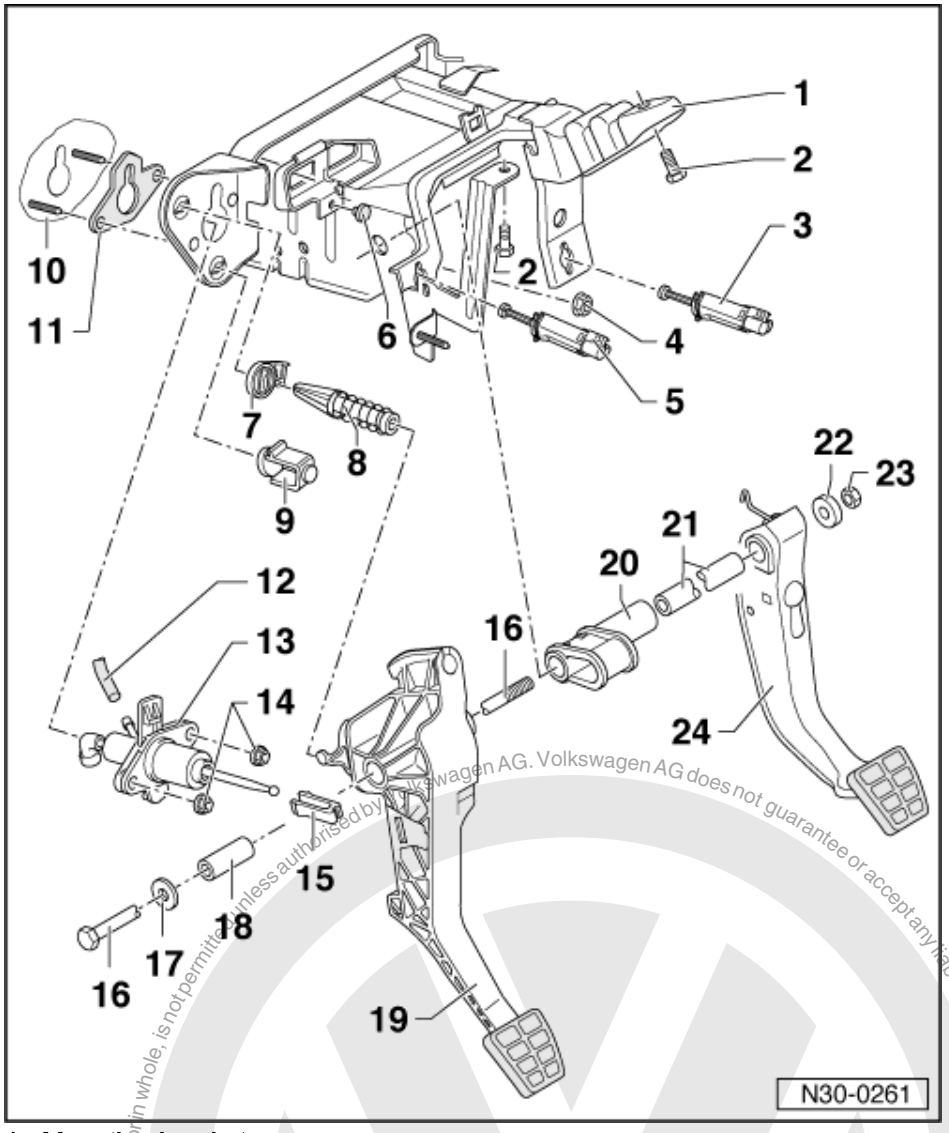

1 Mounting bracket
- Remove steering column before removing

=> Running gear, axles, steering; Repair group 48; Airbag, steering wheel, steering column; Removing and installing steering column Airbag, steering wheel, steering column Removing and installing steering column

2 Hexagon bolt, 25 Nm

3 Brake light switch
- When removing and installing the switch, push brake pedal down as far as possible by hand
- Before removing the clutch pedal -item 19 - remove switch by turning 90° clockwise and guide through mounting hole
- Guide switch through mounting hole and secure by turning 90° anti-clockwise
- Check function of brake lights

Protected by copyright. Copyright by Volkswagen AG.
This document, in any form or in whole, is not permitted unless authorised by Volkswagen AG. Volkswagen AG does not guarantee or accept any liability with respect to the correctness of information in this document. Copyright by Volkswagen AG.
satelettronica

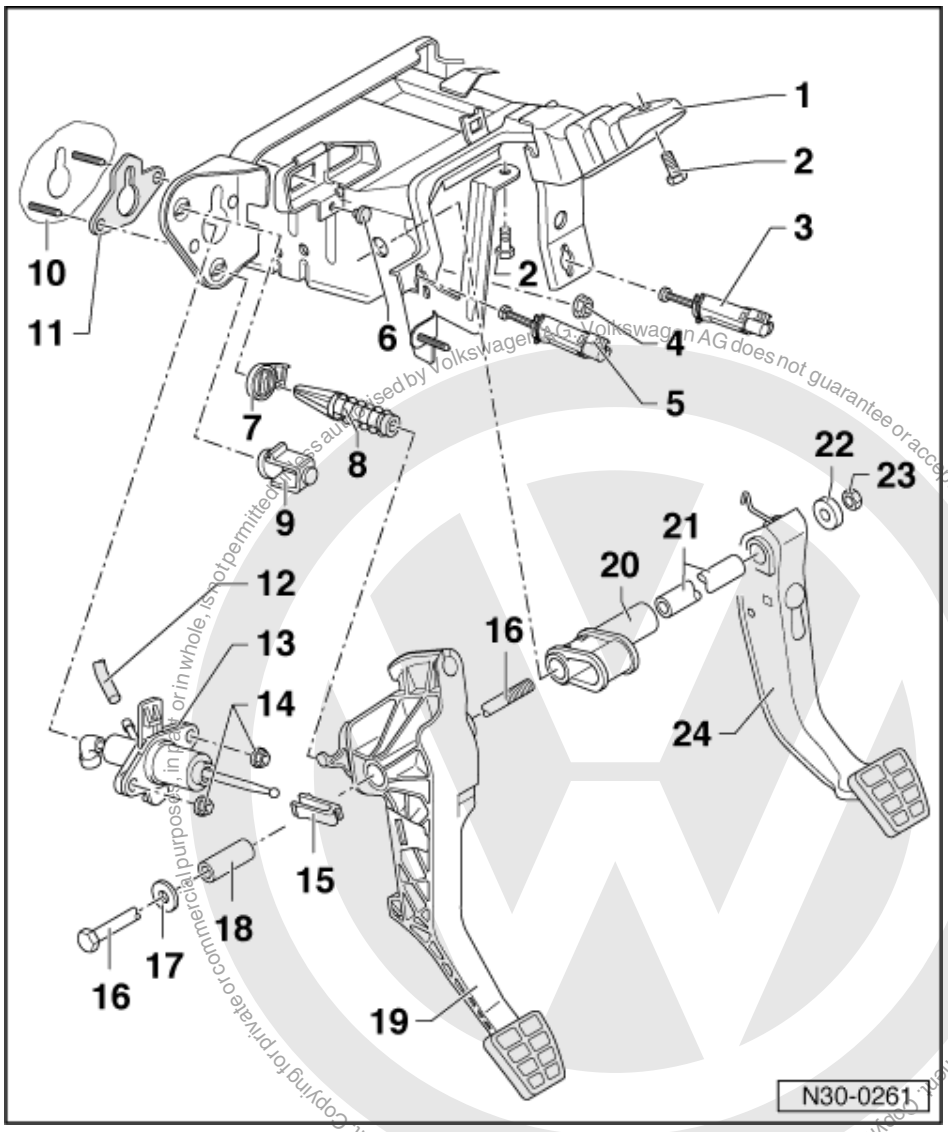

4 Self-locking hexagon nut, 25 Nm
- Qty. 5
- For mounting bracket to stud/brake servo

5 Clutch pedal switch
- When removing and installing the switch, push clutch pedal down as far as possible by hand
- Before removing the clutch pedal -item 19 - remove switch by turning 90° clockwise and guide through mounting hole
- Guide switch through mounting hole and secure by turning 90° anti-clockwise

6 Rubber buffer
- Clip into mounting bracket

7 Over-centre spring mounting
- Remove by turning clockwise
- Install by turning anti-clockwise

satelettronica

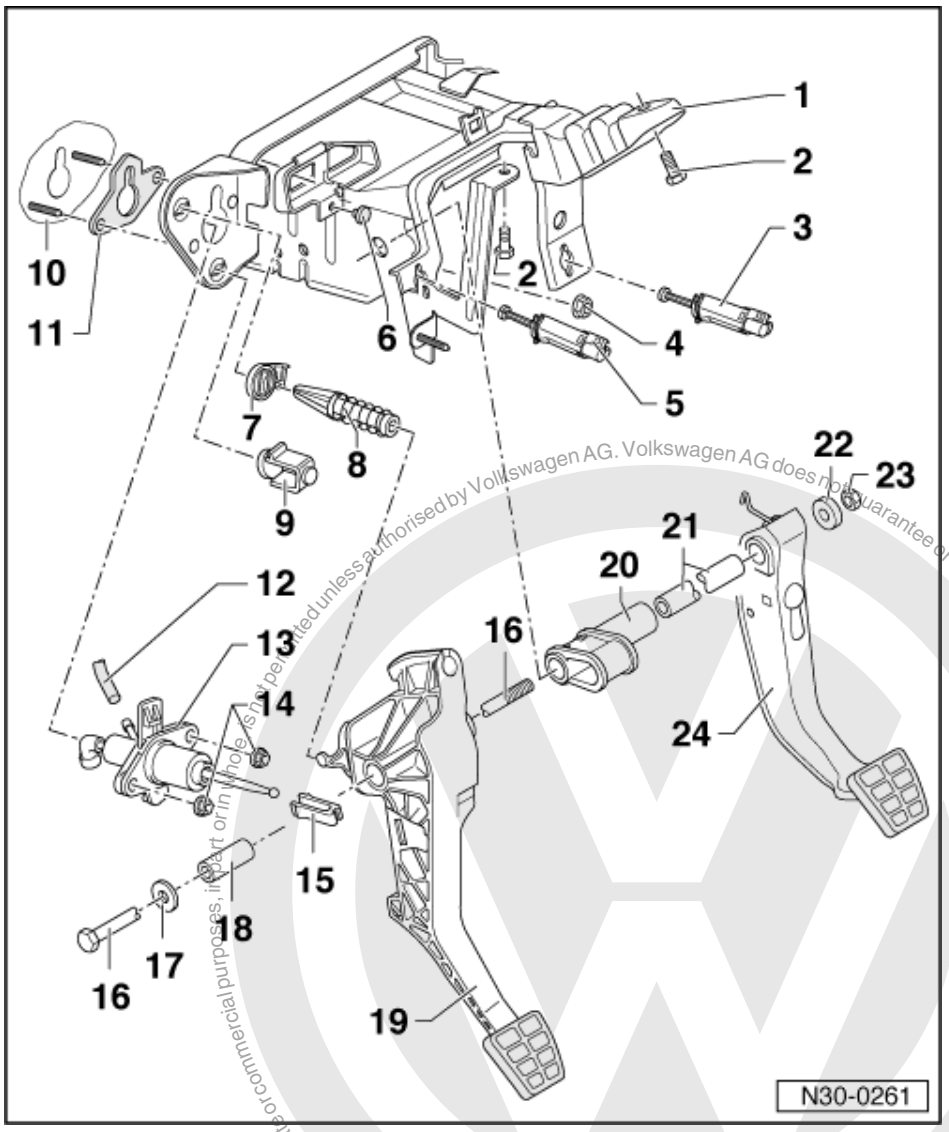

8 Over-centre spring
- Removing and installing
  =>page 16

9 Stop
- For clutch pedal
- Installation position => Page 24

10 Bulkhead

11 Seal
- Always renew

12 Supply hose

13 Master cylinder
- Removing and installing
  => page 21

14 Self-locking hexagon nut, 25 Nm
- Always renew

15 Retainer
- Removing and installing => Page 19

Protected by copyright. Copyright by Volkswagen AG.
Copying for private or commercial purposes, in part or in whole, is not permitted unless authorised by Volkswagen AG. Volkswagen AG does not guarantee or accept any liability with respect to the correctness of information in this document.
satelettronica

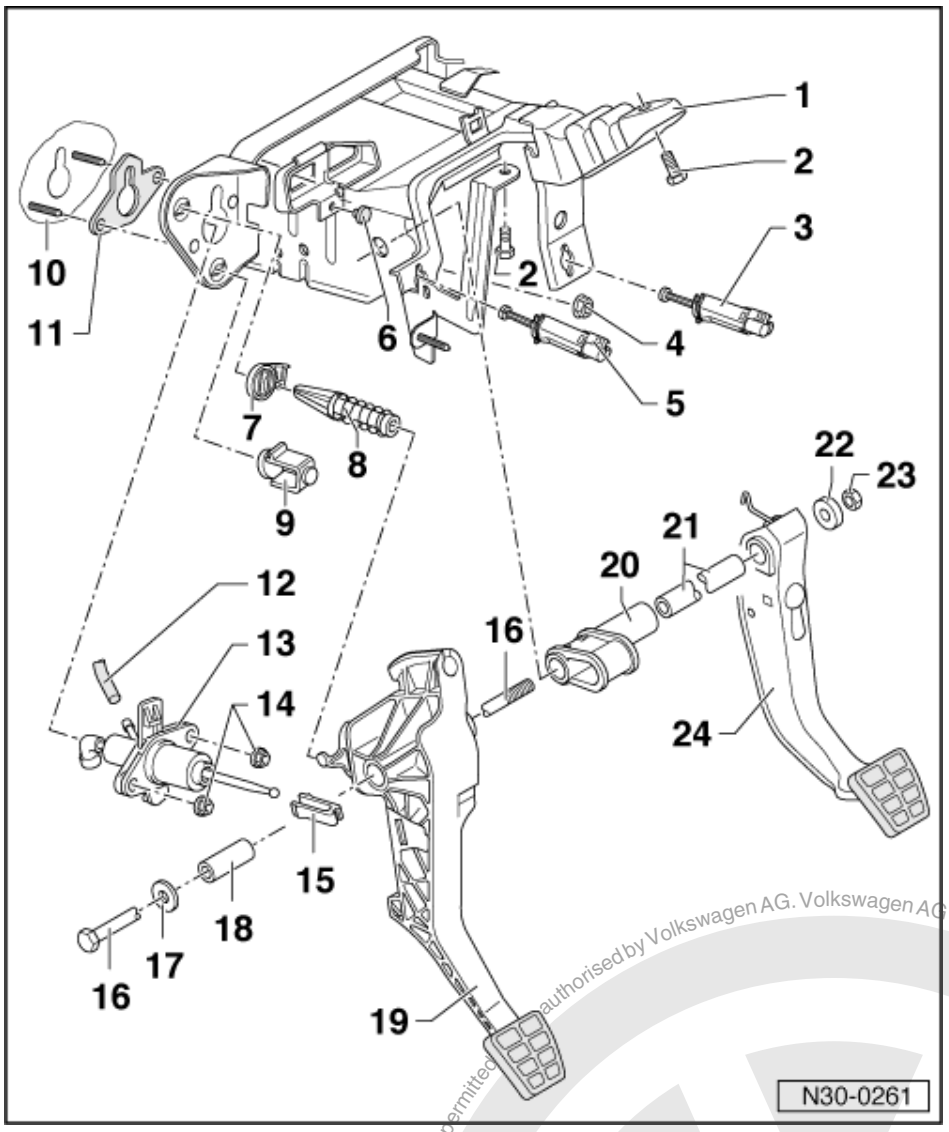

16 Pivot pin for clutch and brake pedal
17 Shim
18 Mounting bush
- For clutch pedal
- Lubricate with polyurea grease

19 Clutch pedal
- Removing and installing => page 13

20 Mounting bush
- For mounting the steering column

21 Mounting bush
- Push into mounting bush (Item 20), then fit onto brake pedal

22 Shim
23 Hexagon nut, 25 Nm
24 Brake pedal

Protected by copyright. Copying for private or commercial purposes, in part or in whole, is not permitted unless authorised by Volkswagen AG. Volkswagen AG does not guarantee or accept any liability with respect to the correctness of information in this document. Copyright by Volkswagen AG.
satelettronica

1.3 - Removing and installing clutch pedal

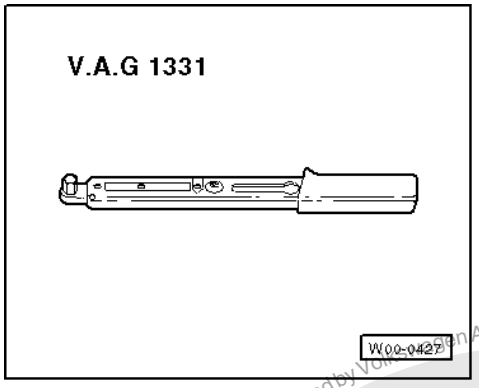

Special tools and workshop equipment required

- V.A.G 1331 Torque wrench

Removing

- First check whether a coded radio is fitted. If this is the case obtain the anti-theft coding.
- With the ignition switched off disconnect the battery earth strap.
- Take lower trims off lighting switch and steering column and remove driver's stowage compartment.

=> General body repairs, interior; Repair group 68; Stowage compartments, covers, trims Stowage compartments, covers, trims

- Remove driver's footwell cover.

=> General body repairs, interior; Repair group 70; Removing and installing dash panel Removing and installing dash panel

- Removing over-centre spring => page 16 .
- Separate clutch pedal from master cylinder => Page 21 and push operating rod towards engine compartment onto stop.

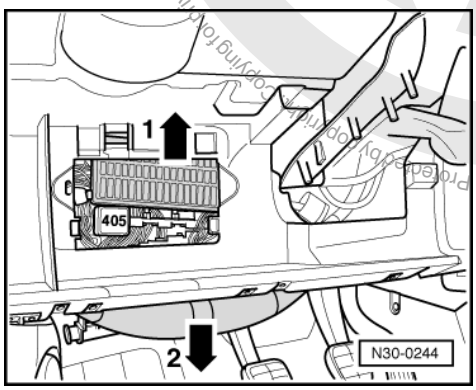

- -> Undo fuse holder, release from lower mounting and push upwards -arrow 1-.
- Unhook wiring harness and pull downwards -arrow 2-.

Copyright by Volkswagen AG. Volkswagen AG does not guarantee or accept any liability with respect to the correctness of information in this document. Copyright by Volkswagen AG.
Provided by Vag-Shop.com
satelettronica

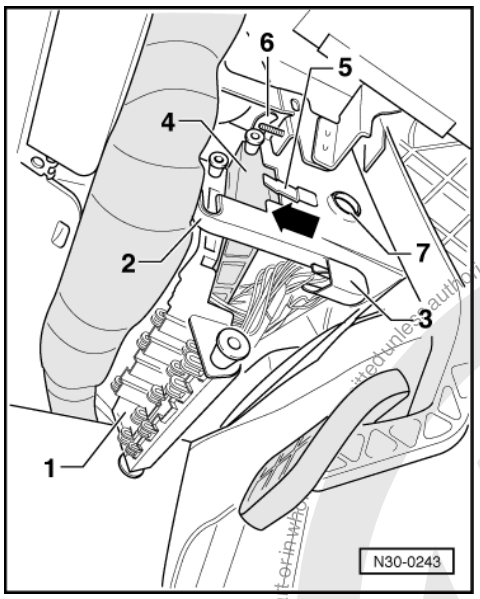

- -> Release coupling station -1- from retainers -2- and -3- and move downwards carefully.
- Move relay carrier -4- in direction of arrow by lifting locking lug -5- and pull carefully downwards out of upper guide -6-.

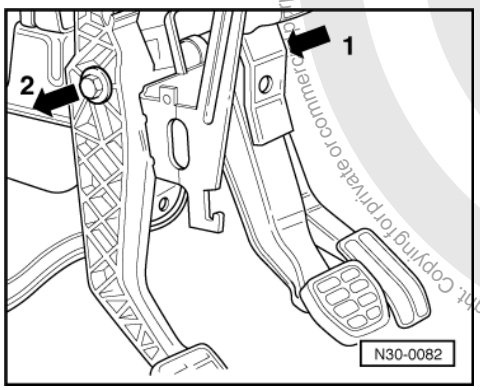

- -> Unbolt hexagon nut (arrow 1) for clutch pedal and brake pedal pivot pin and remove complete with washer.
- Pull pivot pin out carefully (arrow 2) and simultaneously insert an M8 bolt or drift from the right (arrow 1) to hold brake pedal in position.

Protected by copyright. Copying for private or commercial purposes, in whole or in part, is not permitted unless authorised by Volkswagen AG. Volkswagen AG does not guarantee or accept any liability with respect to the correctness of information in this document. Copyright by Volkswagen AG.
satelettronica

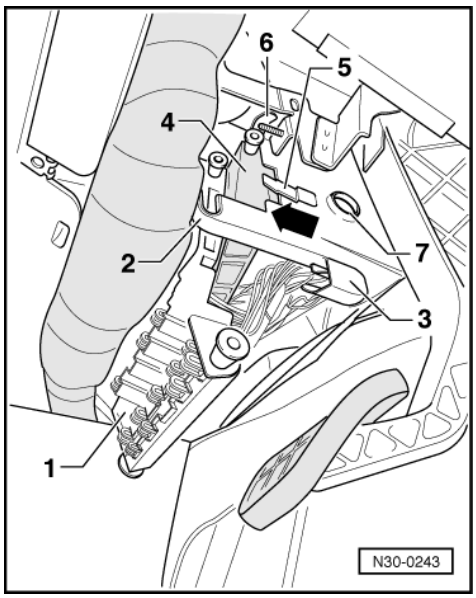

- -> Guide clutch pedal pivot pin carefully through hole -7- in cover, ensure the electrical wiring is not damaged when doing this.

Note:

Do not move brake pedal and steering column. They are no longer mounted after pulling out pivot pin.

- Take out clutch pedal.

Installing

Installation is carried out in the reverse sequence, when doing this note the following:

- Install over-centre spring => page 16 .
- Fit clutch pedal with mounting tube and washer onto pivot pin.
- Pull M8 bolt or drift out to right.
- Simultaneously push pivot pin for clutch pedal and brake pedal in onto stop, move brake pedal slightly when doing this if necessary.
- Fit washer and nut and tighten.

Protected by copyright. Copyright for private or commercial purposes, in part or in whole, is not permitted unless authorised by Volkswagen AG. Volkswagen AG does not guarantee or accept any liability with respect to the correctness of information in this document. Copyright by Volkswagen AG.
satelettronica

Copyright by Volkswagen AG, Wolfsburg. Volkswagen AG does not guarantee or accept any liability with respect to the correctness of information in this document. Copying for private or commercial purposes, in part or in whole, is not permitted unless authorised by Volkswagen AG.

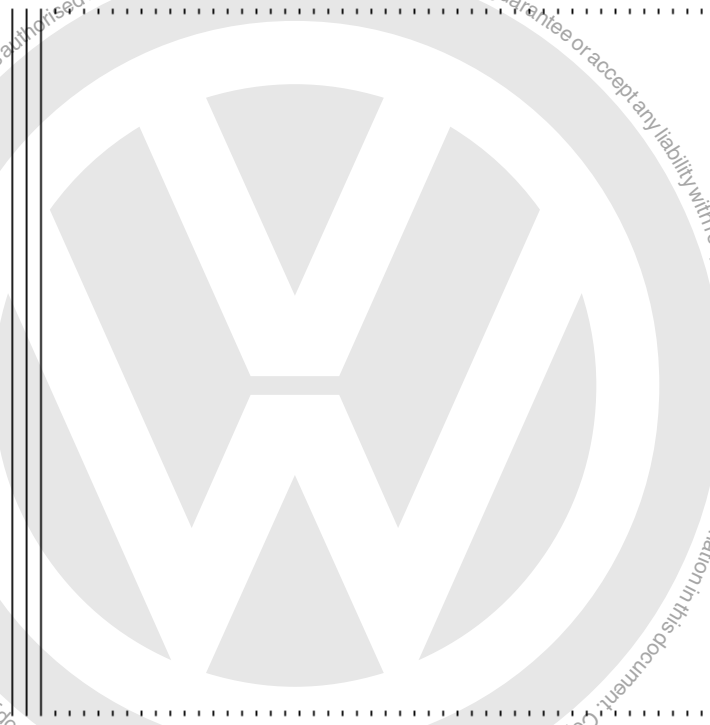

- -> The retainer -A- must be fitted to the master cylinder operating rod -B-.
- Press clutch pedal in direction of arrow to engage. Ensure correctly located.
- Hook or screw relay holder, connector station and fuse holder into mounting, check wiring and relay connectors and press fully home if necessary.

Further installation is basically a reverse of the removal sequence.
- Install driver's footwell cover and stowage compartment below dash panel.

=> General body repairs, interior; Repair group 70; Removing and installing dash panel Removing and installing dash panel
- Install driver's stowage compartment and lighting switch and steering column lower trims.

=> General body repairs, interior; Repair group 68; Stowage compartments, covers, trims Stowage compartments, covers, trims

Tightening torques

Hexagon nut on pivot pin for clutch and brake pedal	25 Nm

1.4 - Removing and installing over-centre spring

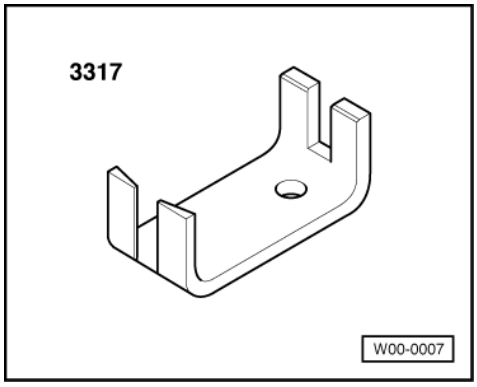

satelettronica

Special tools and workshop equipment required

- 3317 Installation clamp

Removing

- Remove driver's side lower cover

=> General body repairs, interior; Repair group 70; Removing and installing dash panel Removing and installing dash panel

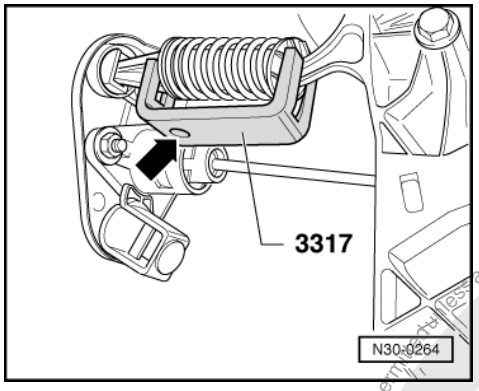

- -> Compress over-centre spring with clutch pedal and fit retaining clamp 3317 from below.

Note:

The drilling (arrow) faces towards bulkhead.

- Bring clutch pedal to rest position, when doing this take out over-centre spring together with retaining clamp 3317 downwards.

Installing

- Depress clutch pedal onto stop towards bulkhead.

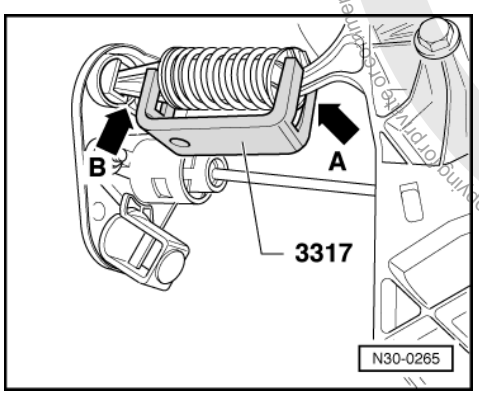

- -> Insert over-centre spring together with retaining clamp into rear mounting first -arrow B- from below.
- Then depress clutch pedal until the over-centre spring with retaining clamp are lying against the clutch pedal mounting pin -arrow A-.
- Take retaining clamp out downwards whilst bringing clutch pedal to rest position.

Protected by copyright. Copying for private or commercial purposes, in part or in whole, is not permitted unless authorised by Volkswagen AG. Volkswagen AG does not guarantee or accept any liability with respect to the correctness of information in this document. Copyright by Volkswagen AG.
satelettronica

1.5 - Assembly overview - Hydraulic system

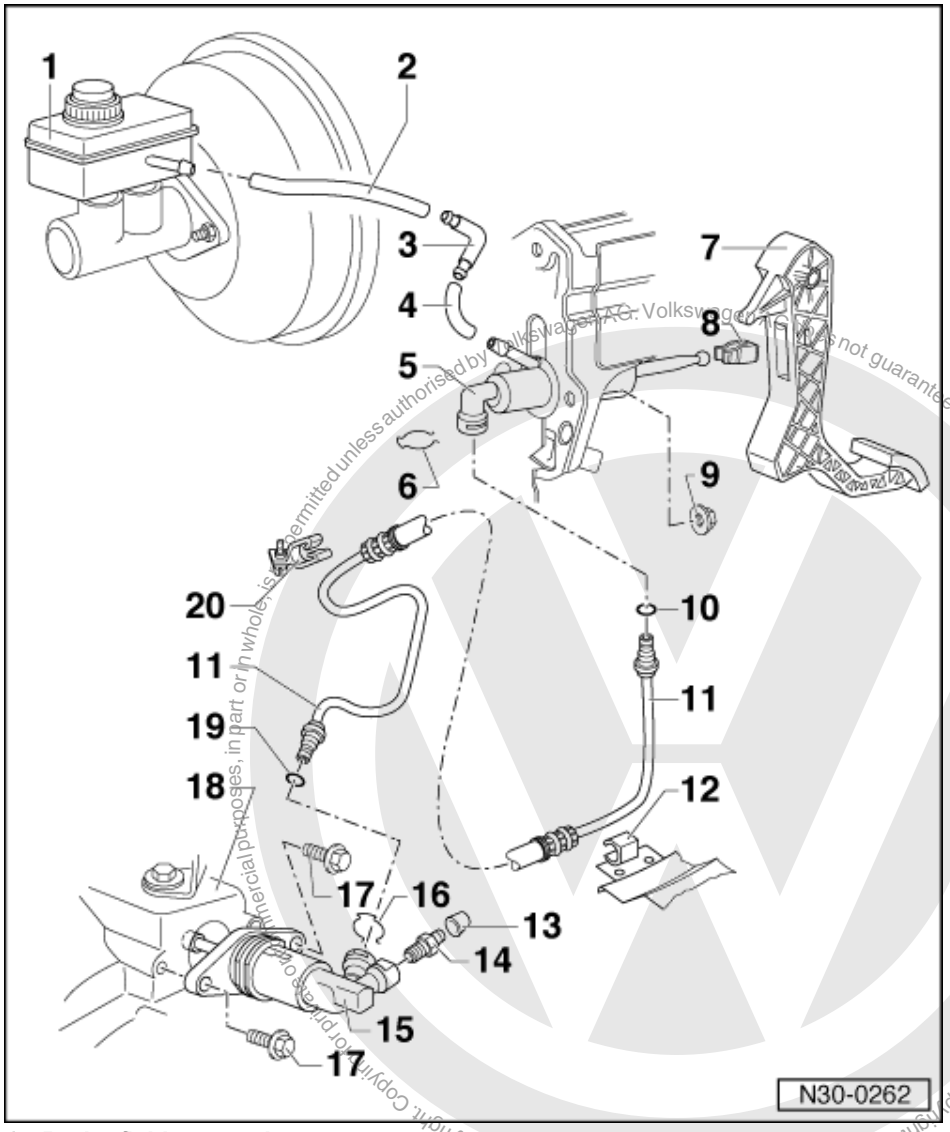

Protected by copyright. Copyright by Volkswagen AG.

1 Brake fluid reservoir
2 Supply hose
- Upper part

3 Angle piece
4 Supply hose
- Lower part

5 Master cylinder
- Removing and installing => page 21

6 Clip
7 Clutch pedal
- Removing and installing => page 13

satelettronica

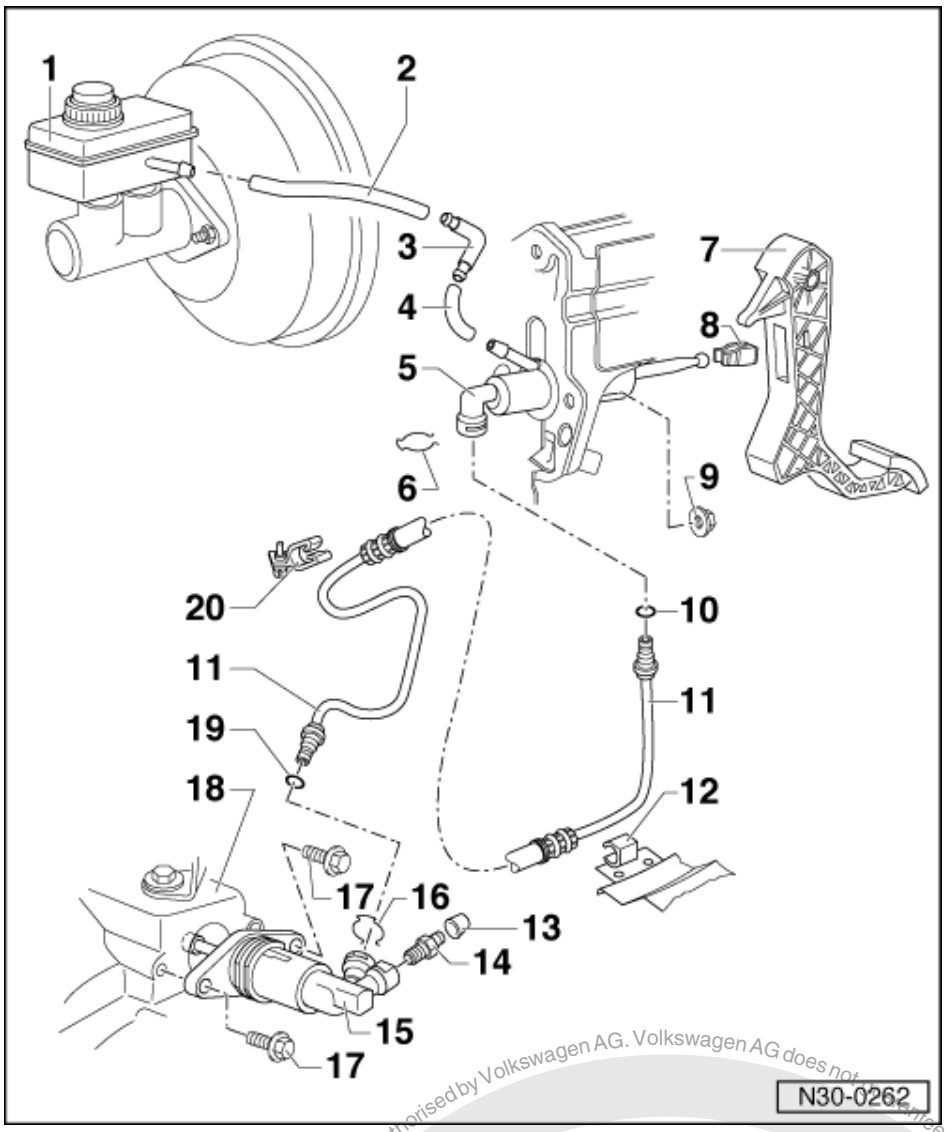

8 Retainer
- Replace only with master cylinder removed
- Removing =>Fig. 1
- Pressing on =>Fig. 2

9 Self-locking hexagon nut, 25 Nm
- Always renew

10 Seal
- Pull onto pipe/hose connection
- Moisten with brake fluid when inserting

11 Pipe/hose assembly
- Allocate using parts catalogue

12 Bracket
- Secured to body

13 Dust cap

14 Bleed valve
- Bleeding clutch system
  => page 25

satelettronica
Protected by copyright. Copying for private or commercial purposes, in part or in whole, is not permitted unless authorised by Volkswagen AG. Volkswagen AG does not guarantee or accept any liability with respect to the correctness of information in this document. Copyright by Volkswagen AG.

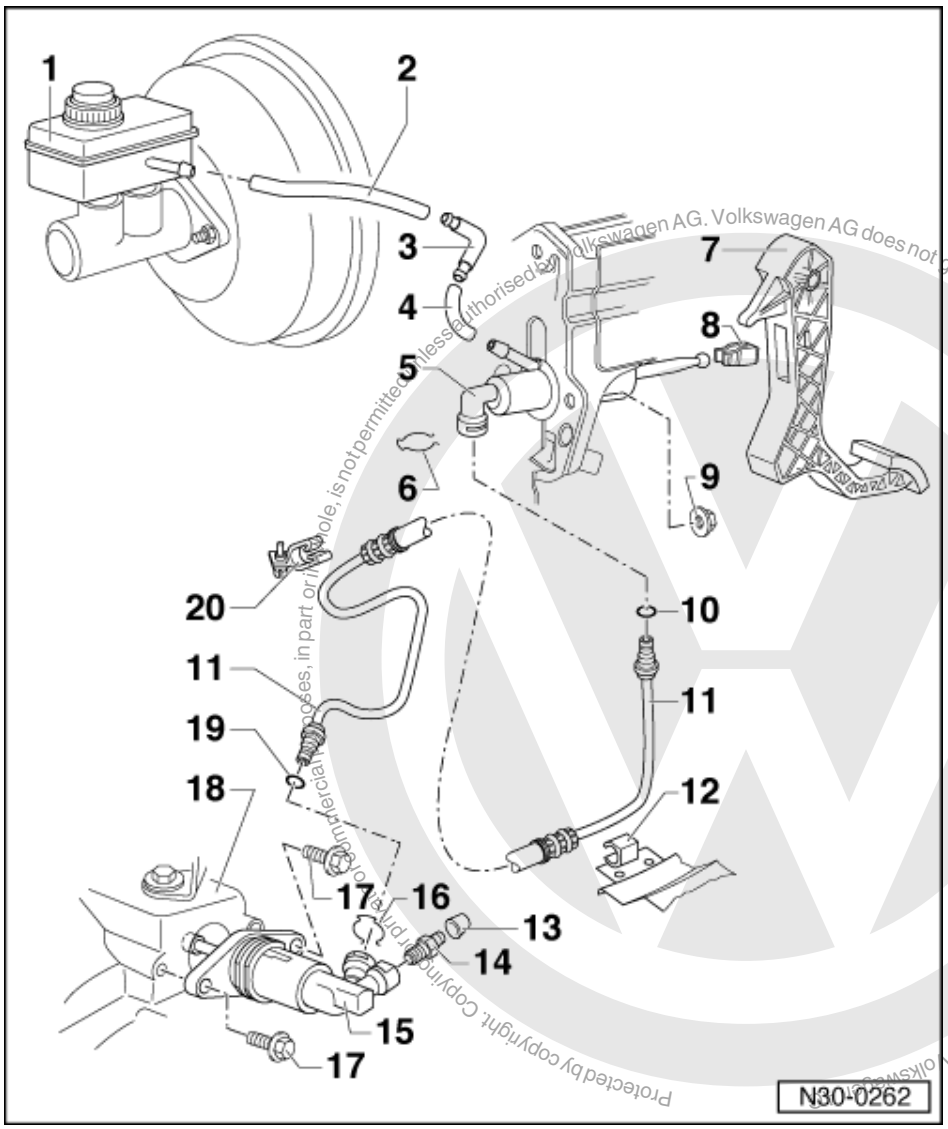

15 Slave cylinder

- Remove the following components before removing slave cylinder:
- Gear selector cable from gear selector lever =>Page 43
- Relay lever and actuating arm for gate selector cable => Page 35
- After installing adjust gear selector mechanism =>Page 48

16 Clip

17 Hexagon bolt, 25 Nm

18 Gearbox

19 Seal

- Pull onto pipe/hose connection
- Insert with brake fluid

20 Hose bracket

- Secure to control cable/gear selector cable support bracket

satelettronica

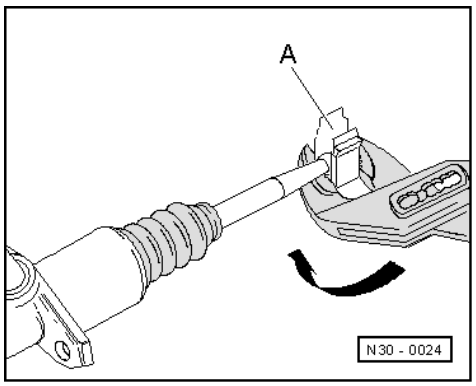

-> Fig.1 Lever retainer -A- off in direction of arrow

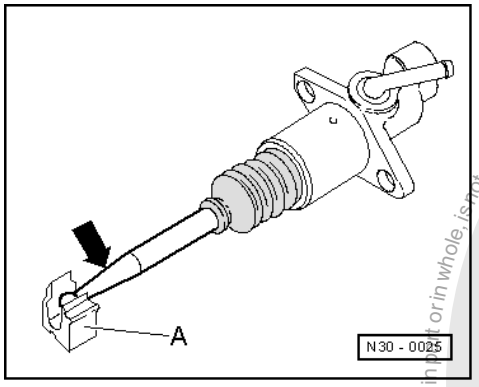

-> Fig.2 Press master cylinder operating rod in retainer -A- in direction of arrow

1.6 - Removing and installing master cylinder

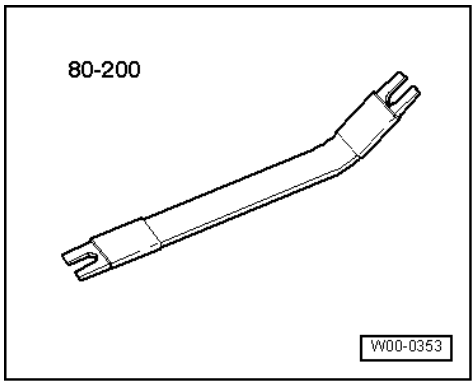

Special tools and workshop equipment required

- 80-200 Removal lever

Protected by copyright. Copying for private or commercial purposes, in part or in whole, is not permitted unless authorised by Volkswagen AG. Volkswagen AG does not guarantee or accept any liability with respect to the correctness of information in this document. Copyright by Volkswagen AG.
satelettronica

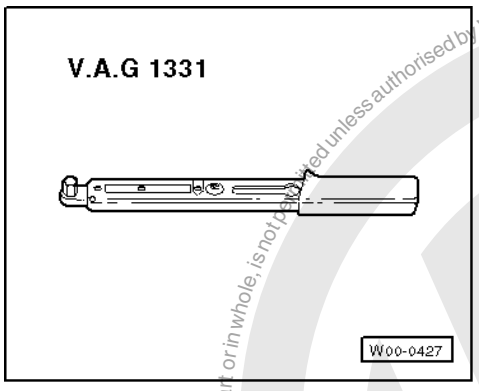

- V.A.G 1331 Torque wrench

Removing

- Place sufficient lint-free cloths under the master cylinder.

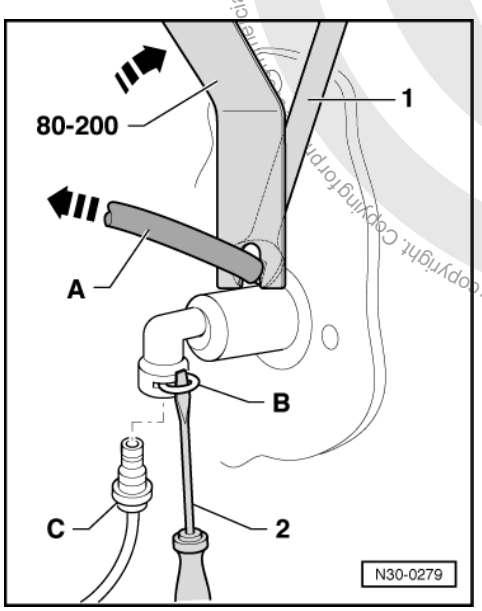

- -> Carefully lever off supply hose -A- to brake fluid reservoir until it can be pulled off by hand.

  1 - Open jaw spanner 22 mm

- Seal supply hose -A-.
- Remove coolant expansion tank, pull off connector and swing to side. Do not open pipes/hoses.
- Lever clip -B- for pipe/hose assembly out from master cylinder with screwdriver -2-.
- Pull pipe/hose assembly -C- out from master cylinder and seal.
- Take lower trims off lighting switch and steering column and remove driver's stowage compartment.

=> General body repairs, interior; Repair group 68; Stowage compartments, covers, trims Stowage compartments, covers, trims

- Remove driver's footwell cover.

=> General body repairs, interior; Repair group 70; Removing and installing dash panel Removing and installing dash panel

- Removing over-centre spring => page 16 .

Protected by copyright. Copyright by Volkswagen AG. Volkswagen AG does not guarantee or accept any liability with respect to the correctness of information in this document. Copyright by Volkswagen AG.
satelettronica

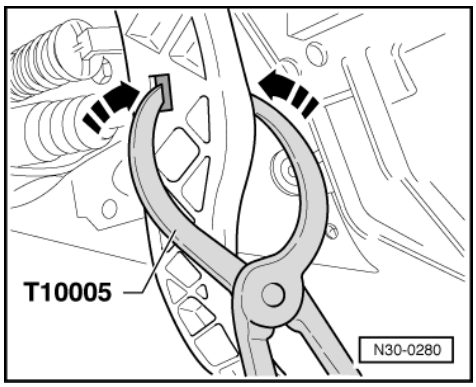

-> Separate master cylinder operating rod from clutch pedal as follows:

- Pull clutch pedal lightly towards passenger compartment.
- Press both sides of mounting inwards using tongs T10005 (arrows).
- Pull piston rod with mounting out of pedal forwards.

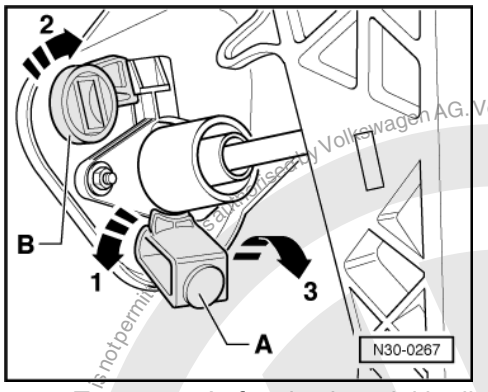

- -> Turn stop -A- for clutch pedal in direction of arrow -1- and take it out.
- Turn mounting -B- for over-centre spring in direction of arrow -2- and take it out.
- Remove the nuts that secure the master cylinder.
- Then swing the master cylinder in direction of arrow -3- out of mounting bracket, when doing this guide the piston rod left past the clutch pedal.

Protected by copyright. Copying for private or commercial purposes, in part or in whole is not permitted unless authorised by Volkswagen AG. Volkswagen AG does not guarantee or accept any liability with respect to the correctness of information in this document. Copyright by Volkswagen AG.
satelettronica

Installing

Installation is carried out in the reverse sequence, when doing this note the following:

- -> The retainer -A- must be fitted to the master cylinder operating rod -B-.
- Press clutch pedal in direction of arrow to engage. Ensure correctly located.

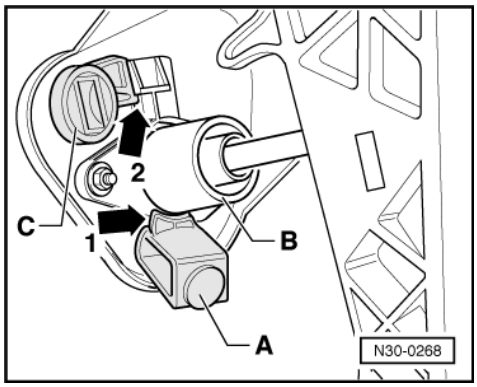

- -> Fit stop -A- for clutch pedal again.

Installation position:

The arm -arrow 1- points towards master cylinder -B-.

- Insert mounting -C-.

Installation position:

- The left lower corner of the lug -arrow 2- lies against the locking arm of the master cylinder.
- Bleeding clutch system after installing master cylinder=>page 25 .

Protected by copyright. Copying for private or commercial purposes, part or in whole, is not permitted unless authorised by Volkswagen AG. Volkswagen AG does not guarantee or accept any liability with respect to the correctness of information in this document. Copyright by Volkswagen AG.
satelettronica

1.7 - Bleeding clutch system

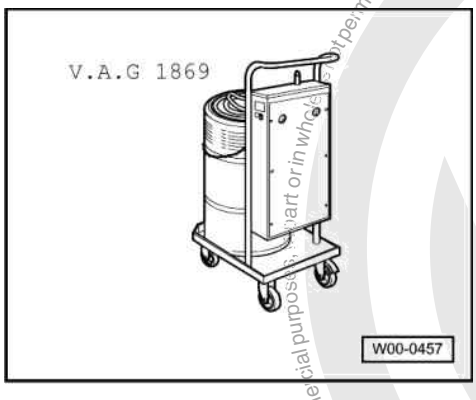

Special tools and workshop equipment required

- V.A.G 1869 Brake filling and bleeder unit

- Brake fluid specifications.

=> Brake systems; repair group 47 Booklet, Bleeding brake system, vehicles with or without ABS

Note:

Prefilling system is not necessary!

- Connect brake filling and bleeder unit V.A.G 1869.
- Connect bleed hose to brake bleeding appliance collector bottle.

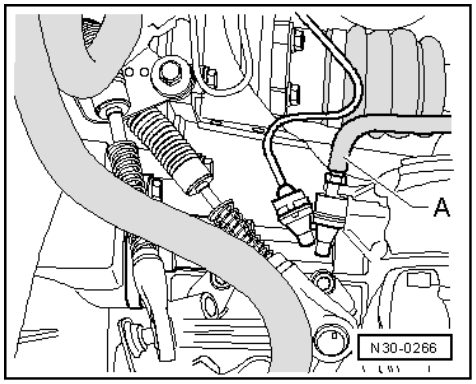

- -> Connect bleed hose -A- to slave cylinder and open bleed valve.
- Depress clutch pedal several times after completion of bleeding process.

Protected by copyright. Copying for private or commercial purposes, in part or in whole, is not permitted unless authorised by Volkswagen AG. Volkswagen AG does not guarantee or accept any liability with respect to the correctness of information in this document. Copyright by Volkswagen AG.
satelettronica

2 - Servicing clutch release mechanism

2.1 - Servicing clutch release mechanism

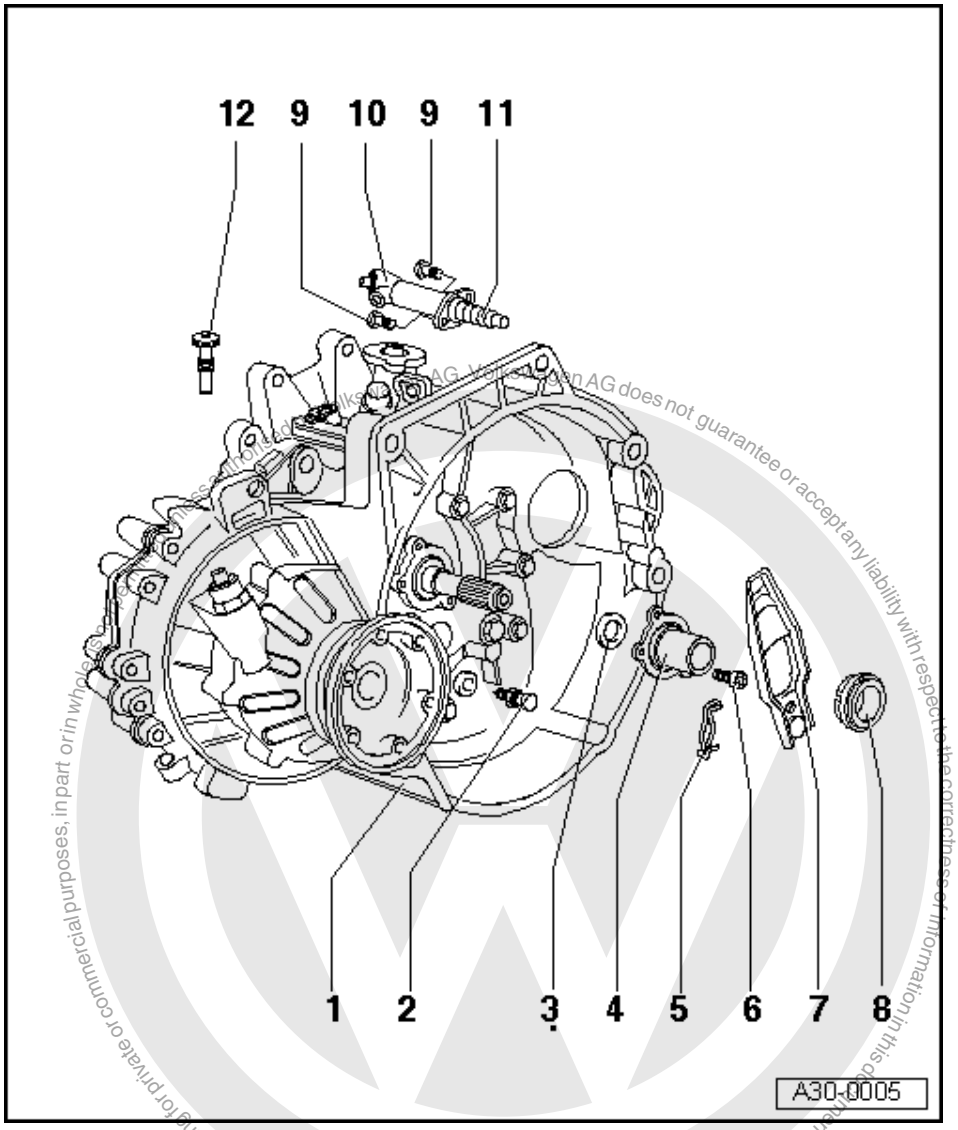

1 Gearbox
2 Ball stud, 25 Nm
- Lubricate with MoS2 grease

3 Input shaft oil seal
- Renewing => Page 101

4 Guide sleeve
- With vulcanised O-ring
- If damaged replace guide sleeve and O-ring together
- Lubricate guide sleeve in area of release bearing with MoS2 grease

5 Retaining spring
- Secure to clutch release lever

satelettronica

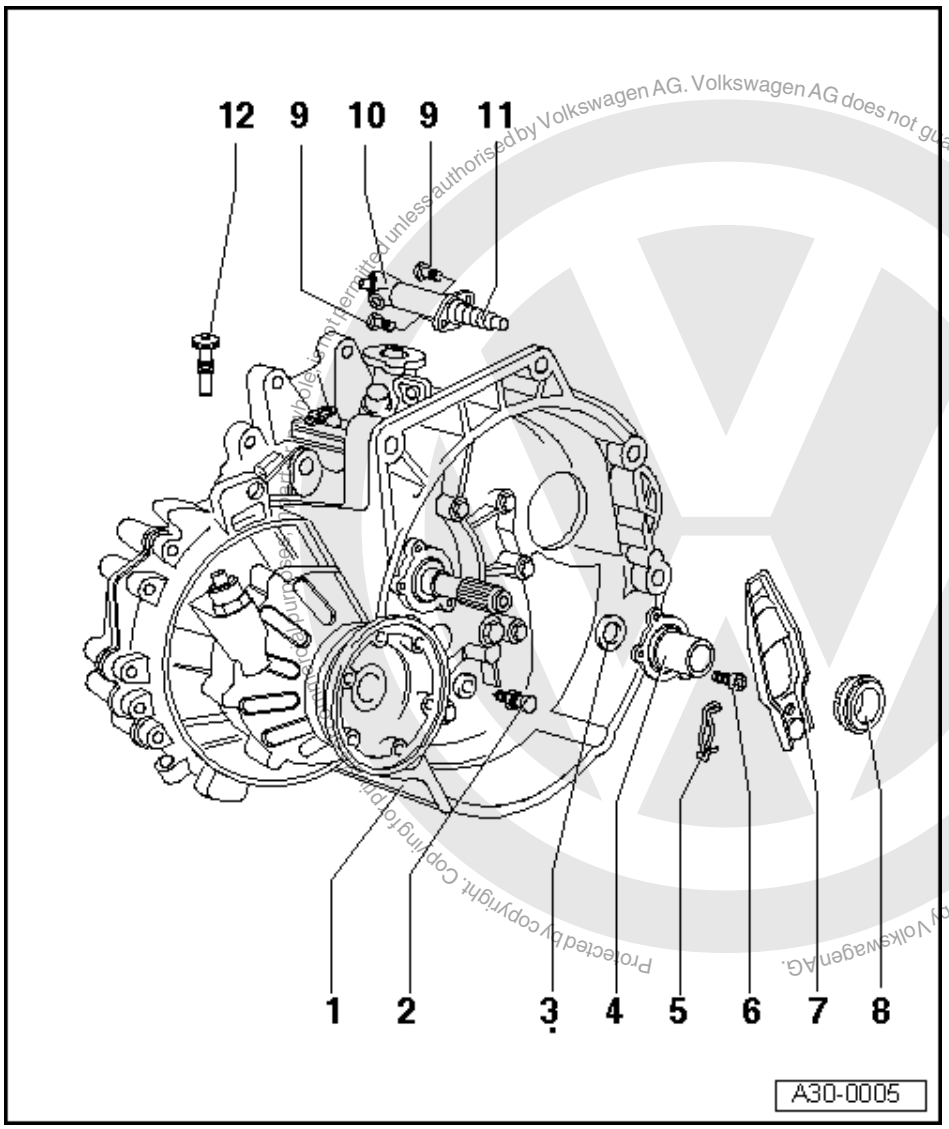

Protected by copyright. Copying for private or commercial purposes, in part or in whole, is not permitted unless authorised by Volkswagen AG. Volkswagen AG does not guarantee or accept any liability with respect to the correctness of information in this document. Copyright by Volkswagen AG.

6 Securing bolt, 20 Nm
7 Clutch release lever
8 Release bearing
- Do not wash-out bearing, only wipe
- Renew noisy bearings
- Lubricate surfaces which contact release lever with MoS2 grease

9 Securing bolt, 20 Nm
10 Slave cylinder
- Removing and installing
  => Page 20

11 Plunger
- Grease end of plunger with MoS2 grease

satelettronica

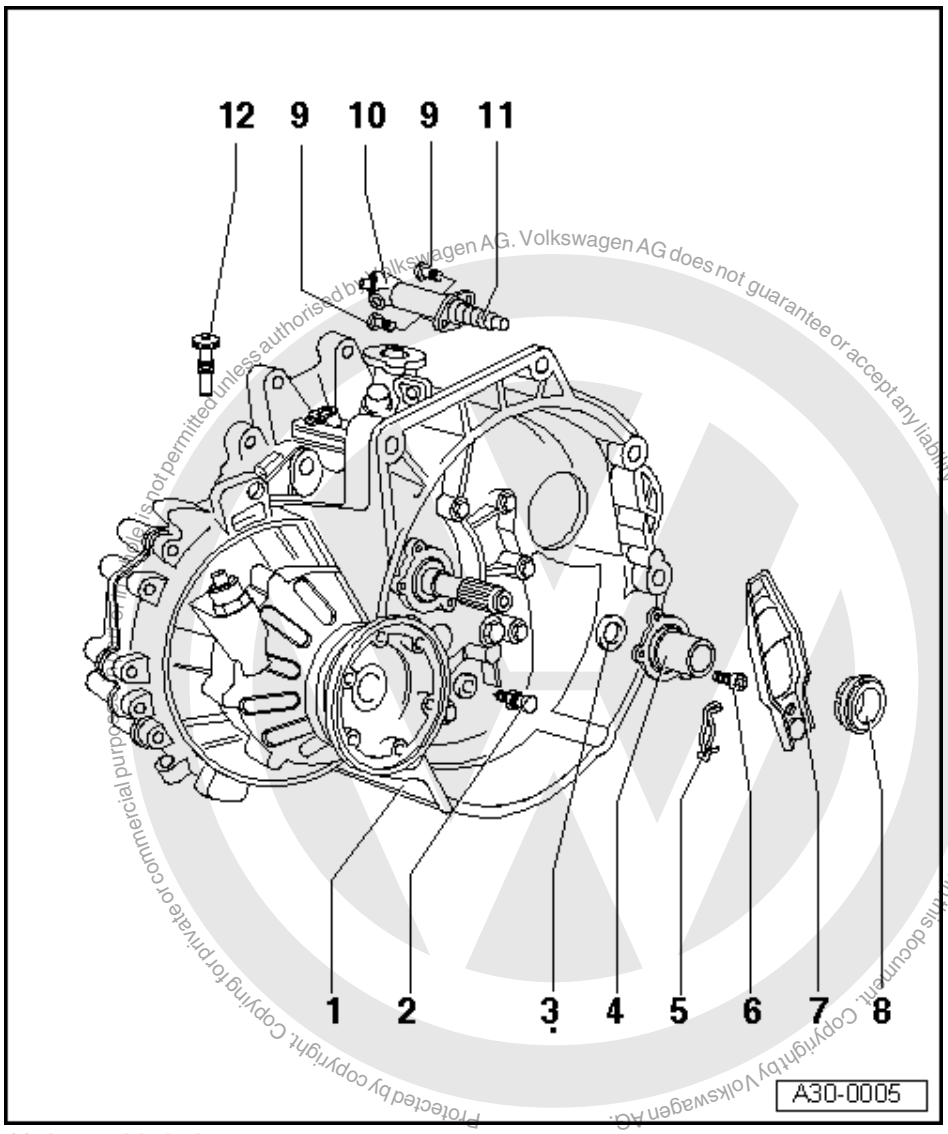

Protected by copyright. Copying for private or commercial purposes is not permitted unless authorised by Volkswagen AG. Volkswagen AG does not guarantee or accept any liability with respect to the correctness of information in this document. Copyright by Volkswagen AG.

12 Assembly bolt

- Secures the clutch release lever when installing gearbox
- Unscrew after gearbox has been installed

Note:

If the assembly bolt (Item 12) is not available, an M 8 x 35 bolt can be used.

satelettronica

3 - Servicing clutch

3.1 - Servicing clutch

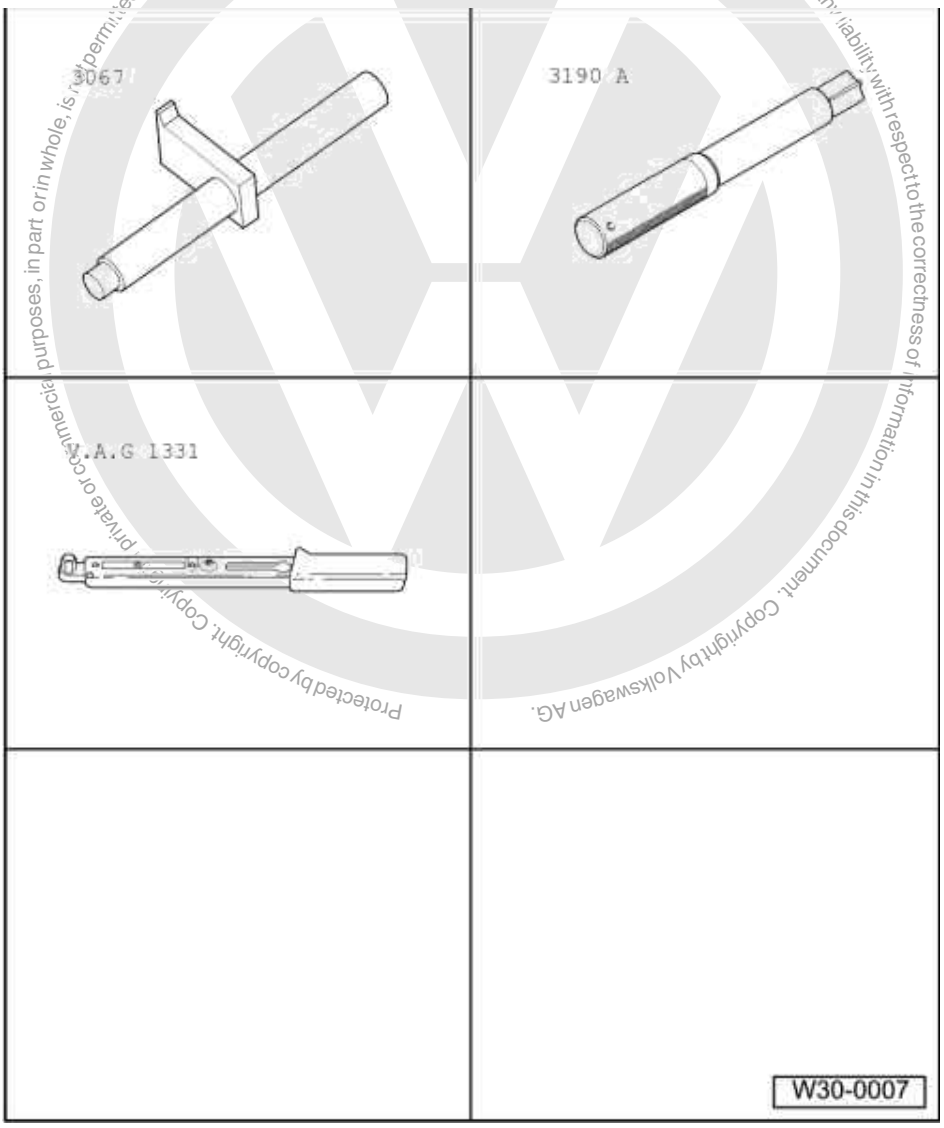

Protected by copyright. Copyright by Volkswagen AG. Volkswagen AG does not guarantee or accept any liability with respect to the correctness of information in this document. Copyright by Volkswagen AG. Not permitted unless authorised by Volkswagen AG. Volkswagen AG does not guarantee or accept any liability with respect to the correctness of information in this document. Copyright by Volkswagen AG. Protected by copyright. Copyright. Private or commercial purposes, in part or in whole, is not permitted unless authorised by Volkswagen AG.

satelettronica

Special tools and workshop equipment required

- 3067 Counter-hold
- 3190 A Centralizing mandrel
- V.A.G 1331 Torque wrench

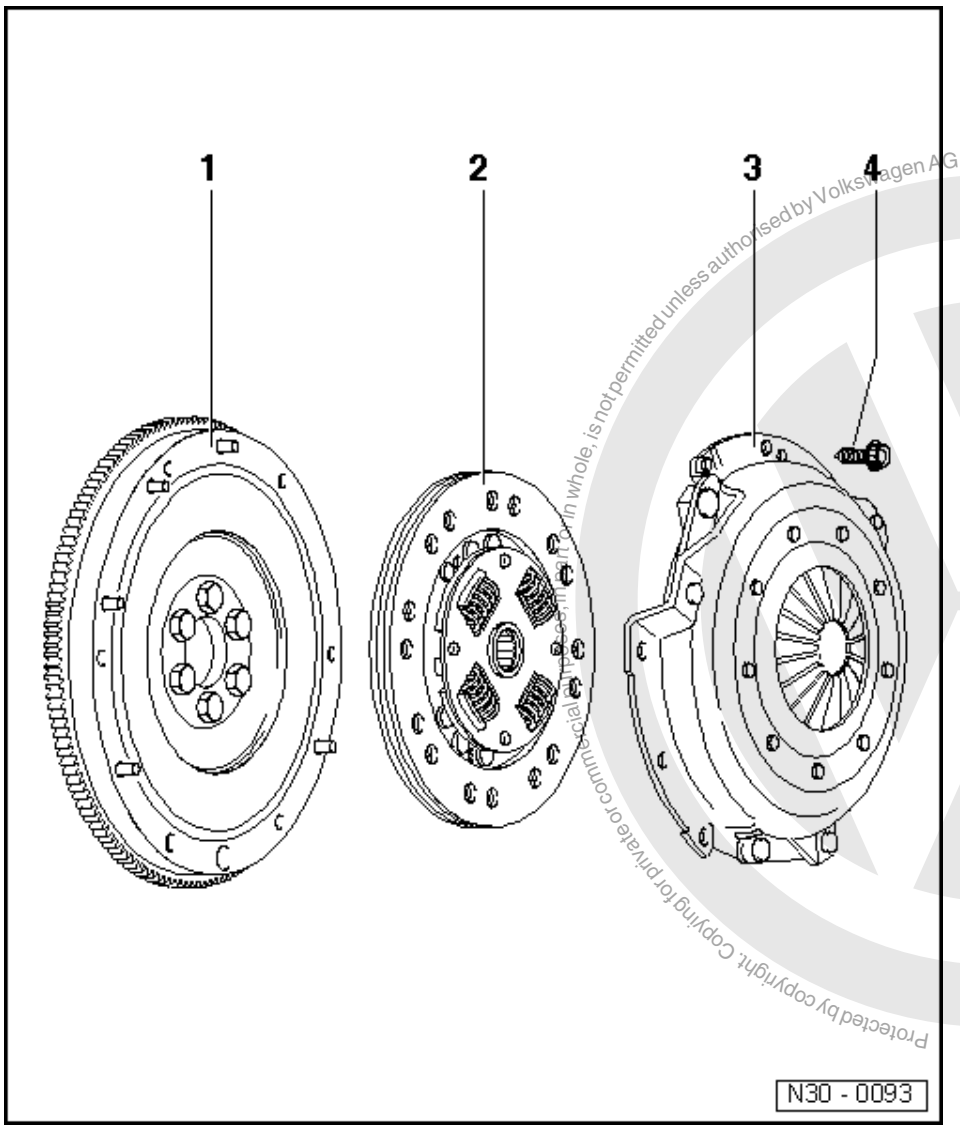

Protected by copyright. Copying for private or commercial purposes, in whole, is not permitted unless authorised by Volkswagen AG. Volkswagen AG does not guarantee or accept any liability with respect to the correctness of information in this document. Copyright by Volkswagen AG.
satelettronica

Notes:

- Before replacing the clutch and pressure plate note fault finding transmission No.9 - Defects on the clutch and clutch mechanism
- Replace clutch plates and pressure plates with damaged or loose rivets
- Select correct clutch plate and pressure plate according to parts list and engine code.

1 Flywheel
- Ensure centring pins are a tight fit
- Contact surface for clutch lining must be free of grooves, oil and grease
- Removing and installing

=> Repair group13; Removing and installing sealing flange and flywheel/drive plate

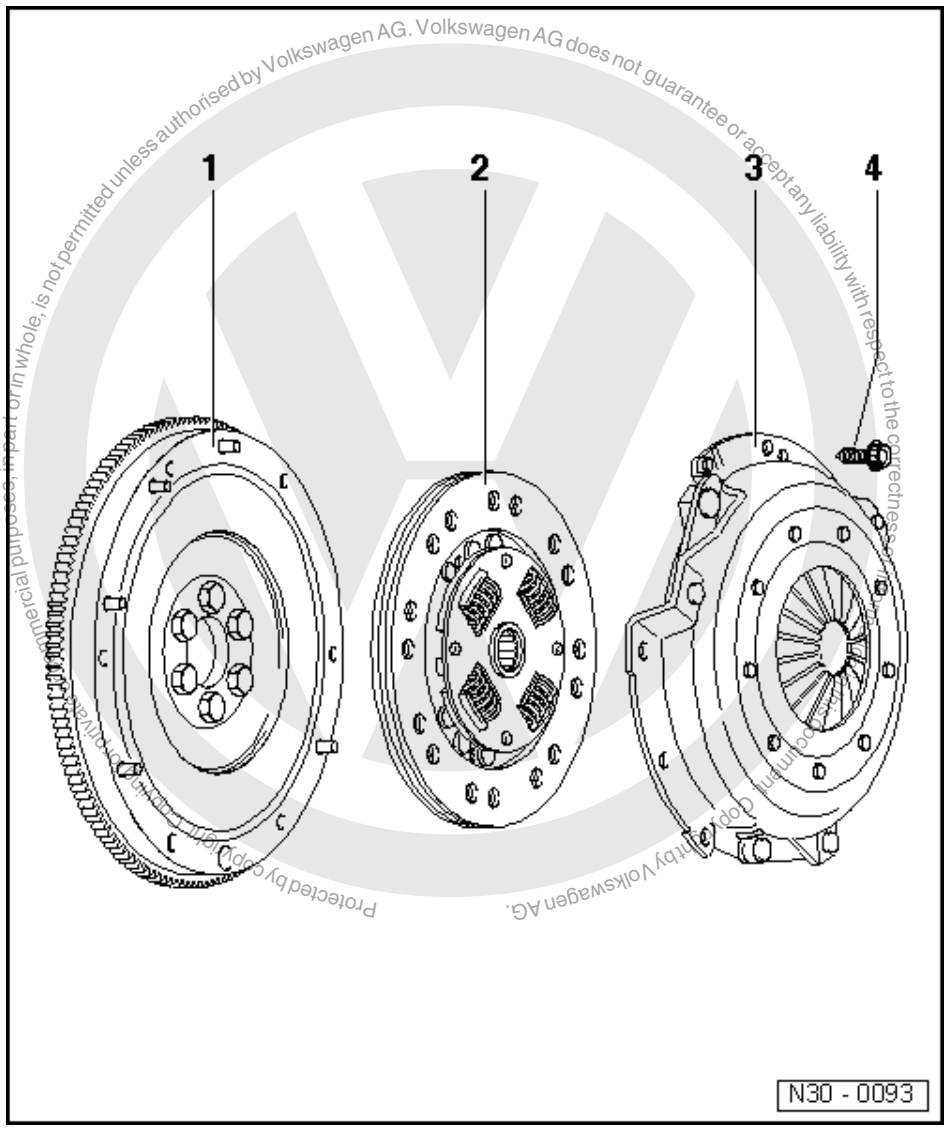

Protected by copyright. Copyright by Volkswagen AG.
Copyright Copyright by Volkswagen AG. Volkswagen AG does not guarantee or accept any liability with respect to the correctness of information. Copyright Copyright by Volkswagen AG. Protected by copyright. Copyright by Volkswagen AG. Commercial purposes, in part or in whole, is not permitted unless authorised by Volkswagen AG. Volkswagen AG does not guarantee or accept any liability with respect to the correctness of information.

2 Clutch plate

- Diameter
  =>Page 2
- Installation position: spring cage faces the pressure plate
- Centring => Fig. 1
- Lightly grease splines

Note:

Clean input shaft splines and on used clutch plates, the hub splines, remove corrosion and apply only a very thin coating of grease Part No: G 000 100 to the input shaft splines. Then move clutch plate to and fro on input shaft until hub moves freely on shaft. Excess grease must be removed.

satelettronica

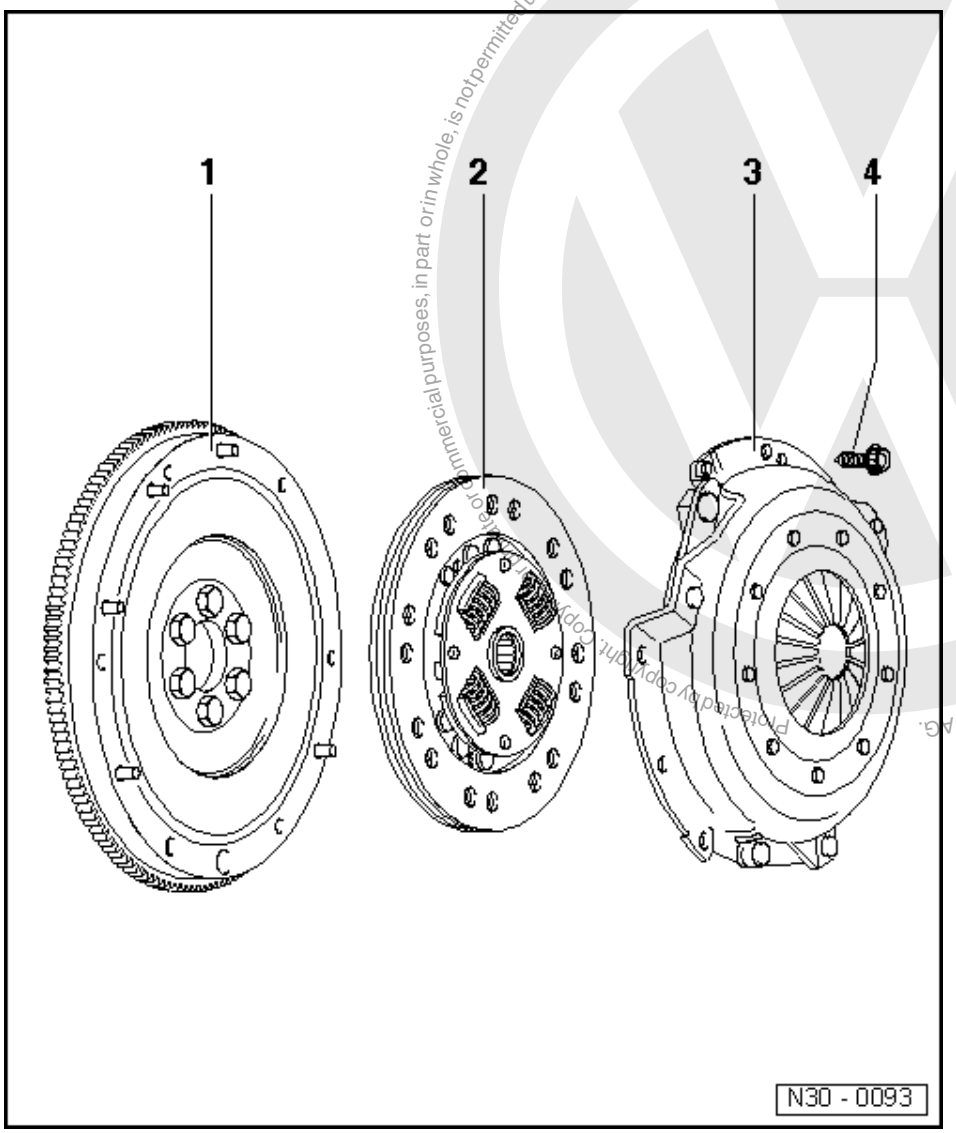

3 Pressure plate

- Removing and installing => Fig. 1
- Check ends of diaphragm spring => Fig. 2

Note:

Pressure plates are protected against corrosion and greased. Only the contact surface may be cleaned, otherwise the service life of the clutch will be considerably reduced.

4 Bolt

- Allocate using parts catalogue
- 20 Nm
- Loosen and tighten gradually and diagonally

Protected by copyright. Copying for commercial purposes, in part or in whole, is not permitted unless authorised by Volkswagen AG. Volkswagen AG does not guarantee or accept any liability with respect to the correctness of information in this document. Copyright by Volkswagen AG.
satelettronica

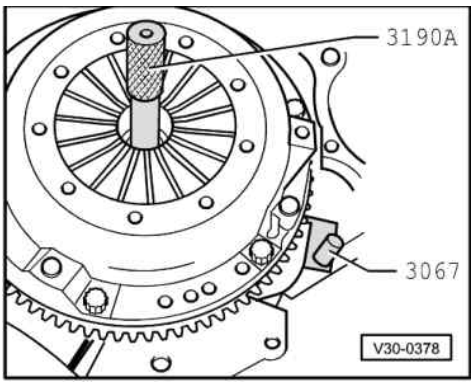

-> Fig.1 Centring clutch plate and removing and installing pressure plate

- Loosen and tighten bolts gradually and diagonally.
- Reverse position of retainer 3067 when removing.

Note:

Pressure plate contact surface and clutch plate must make full contact with flywheel. Tighten bolts diagonally and evenly to prevent damage to the centring holes in the pressure plate housing and the centring pins in the flywheel.

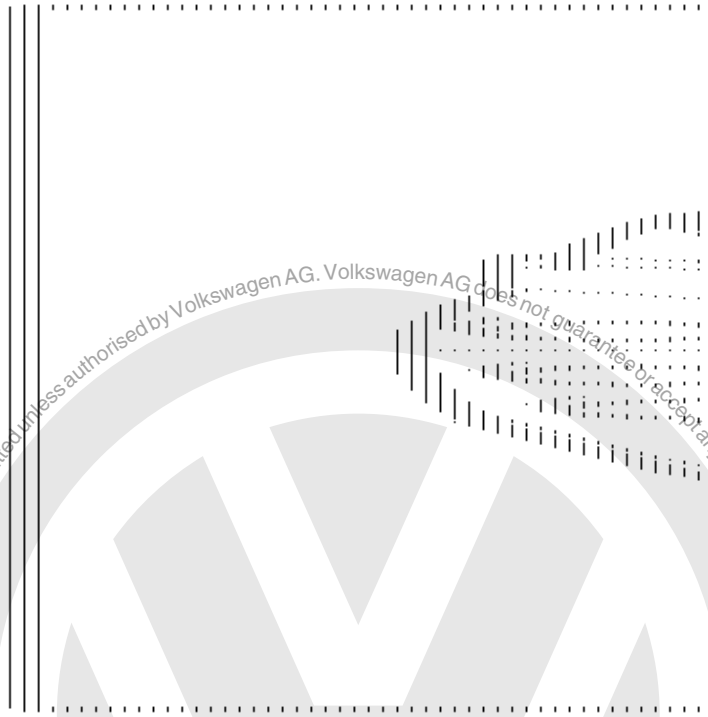

-> Fig.2 Checking ends of the diaphragm spring

- Wear up to half the thickness of the diaphragm spring is permitted.

Protected by copyright. Copying for private or commercial purposes, in part or in whole, is not permitted unless authorised by Volkswagen AG. Volkswagen AG does not guarantee or accept any liability with respect to the correctness of information in this document. Copyright by Volkswagen AG.

satelettronica

34 - Controls, Housing

Protected by copyright. Copying for private or commercial purposes, in part or in whole, is not permitted unless authorised by Volkswagen AG. Volkswagen AG does not guarantee or accept any liability with respect to the correctness of information in this document. Copyright by Volkswagen AG.

satelettronica

1 - Servicing gear selector mechanism

1.1 - Servicing gear selector mechanism

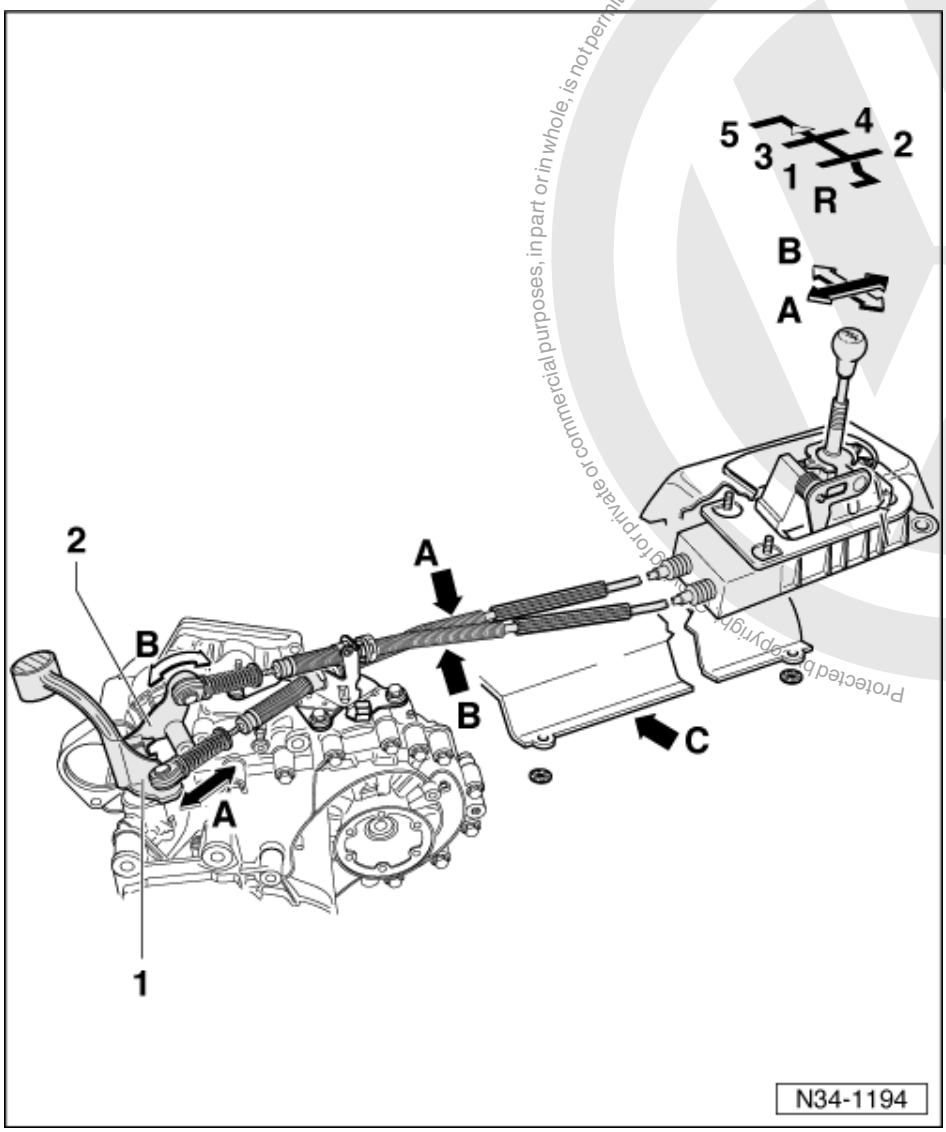

1.2 - Installation position of gear selector mechanism

A - Gear change cable
B - Gate selector cable
C - Heat shield

- Remove before removing the gear selector mechanism.

Arrow -A- Gear selection movement

Arrow -B- Gate selection movement

1 Gear selector lever
2 Relay lever

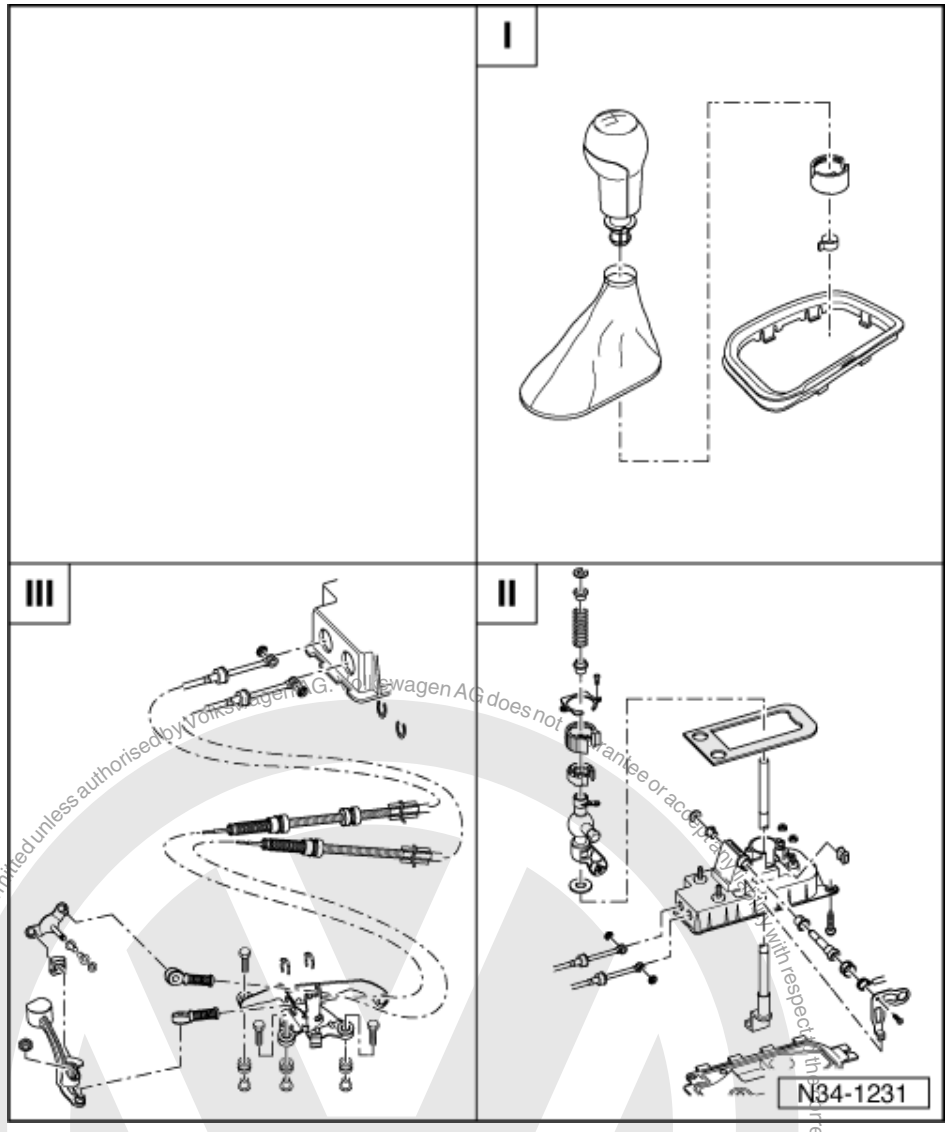

I - Removing and installing gearstick knob and gaiter => Page 37
II - Servicing gear stick and gear stick housing => Page 39
III - Assembly overview: Removing and installing operating cables => Page 43

Removing and installing selector mechanism => Page 46

Adjusting selector mechanism => Page 48

Notes:

- Before working on the selector mechanism, disconnect earth strap from the battery in the engine compartment.
- Note radio code on vehicles with coded radio.

Protected by copyright. Copying for private or commercial purposes, in part or in whole, is not permitted unless authorised by Volkswagen AG. Volkswagen AG does not guarantee or accept any liability with respect to the correctness of information in this document. Copyright by Volkswagen AG.
satelettronica

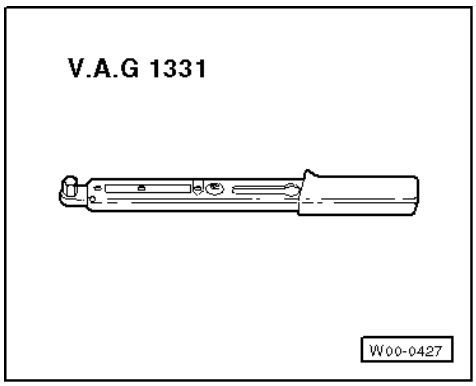

Special tools and workshop equipment required

- V.A.G 1331 Torque wrench

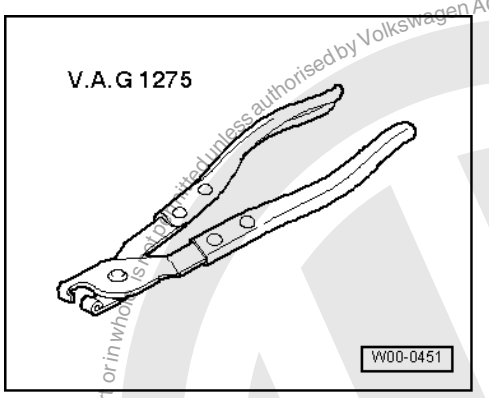

- V.A.G 1275 Pliers

Protected by copyright. Copying for private or commercial purposes, in part or in whole is not permitted unless authorised by Volkswagen AG. Volkswagen AG does not guarantee or accept any liability with respect to the correctness of information in this document. Copyright by Volkswagen AG.
satelettronica

1.3 - Removing and installing selector lever knob and gaiter

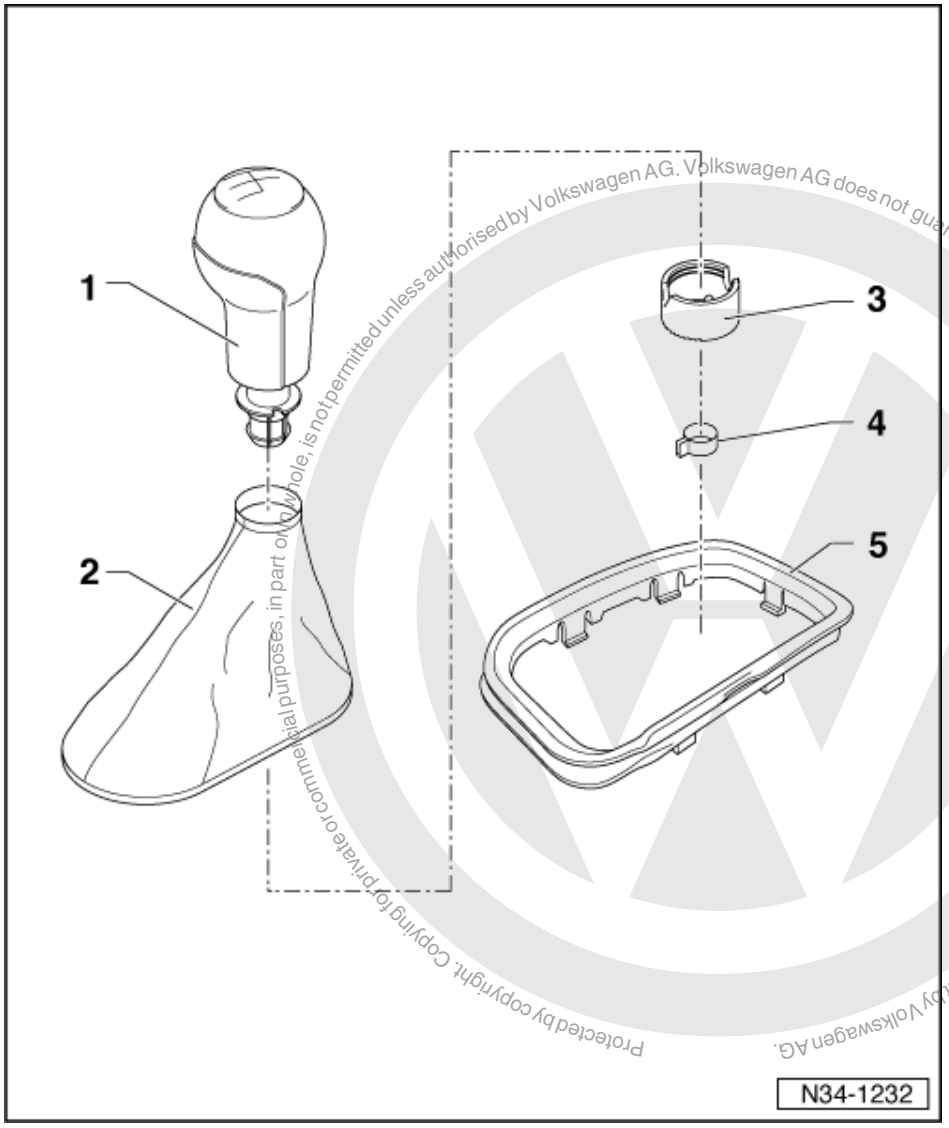

Protected by copyright. Copying for private or commercial purposes, in part or in whole, is not permitted unless authorised by Volkswagen AG. Volkswagen AG does not guarantee or accept any liability with respect to the correctness of information in this document. Copyright by Volkswagen AG.

satelettronica

1 Gear stick knob
- Screw on and off together with gaiter

2 Cover
- Separating from gear stick knob => Fig. 1
- Connect to gear stick knob before installing Fig. 1
- Remove and install together with gear stick knob

3 Sleeve

4 Clamp
- To secure gear stick knob on gear stick
- Secure on gear stick knob -item 1 - using pliers V.A.G 1275

5 Frame

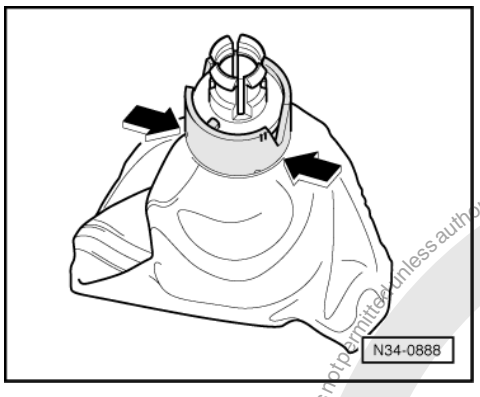

-> Fig.1 Separating cover from gear stick knob and assembling to gear stick knob

- Turn cover inside out.
- Carefully lever clamping sleeve (arrow) off with a screwdriver and pull the gear stick knob out.

Installation is carried out in the reverse sequence, when doing this note the following:

- Insert gear stick knob in cover.
- Push clamping sleeve onto gear stick knob and engage.
- Install gear stick knob and gaiter together.

Protected by copyright. Copying for private or commercial purposes, in part or in whole, is not permitted unless authorised by Volkswagen AG. Volkswagen AG does not guarantee or accept any liability with respect to the correctness of information in this document. Copyright by Volkswagen AG.
satelettronica

1.4 - Servicing gear stick and gear stick housing

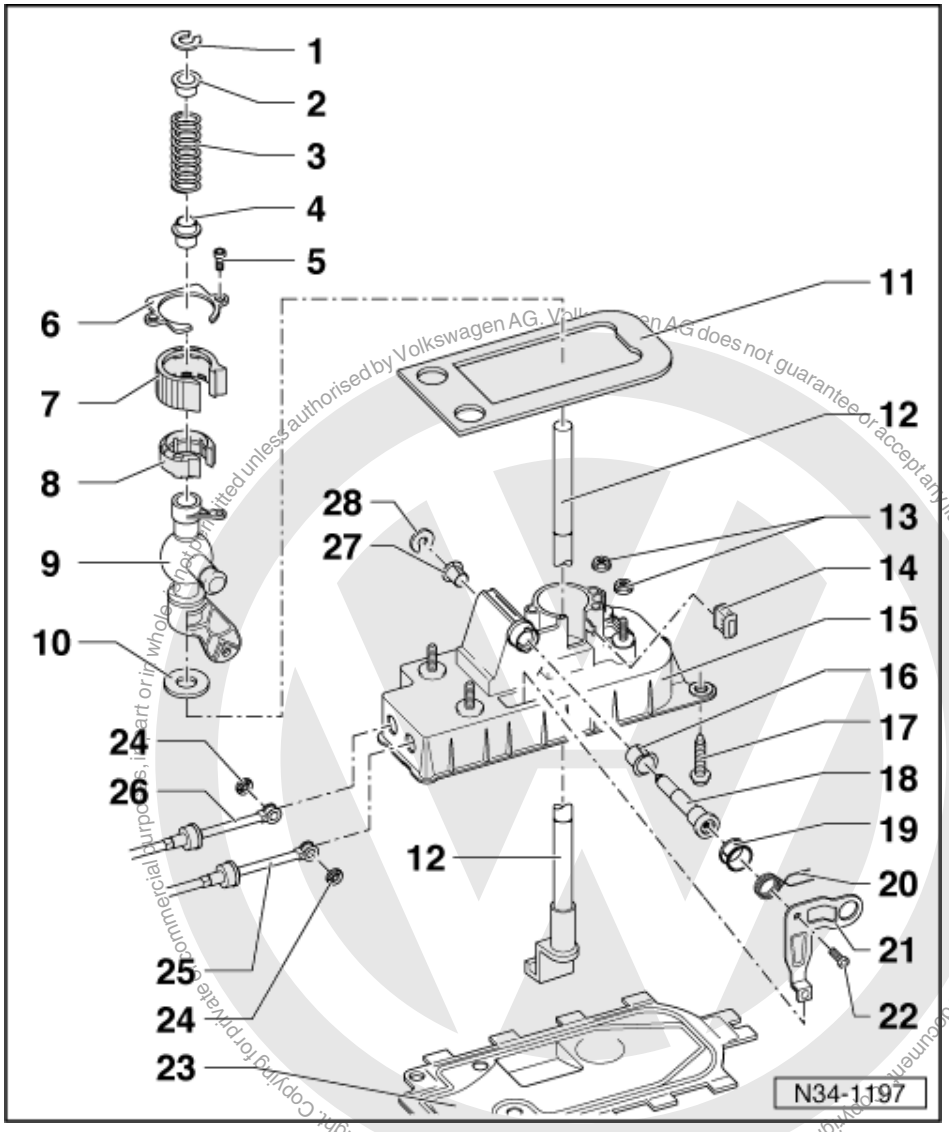

Protected by copyright. Copying for private or commercial purposes, in part or in whole, is not permitted unless authorised by Volkswagen AG. Volkswagen AG does not guarantee or accept any liability with respect to the correctness of information in this document. Copyright by Volkswagen AG.

satelettronica

Note:

Lubricate all mountings and sliding surfaces with Polyurea grease Part No. G 052 142 A2.

1 Circlip
- Removing and installing
  =>Fig. 1

2 Bush
3 Spring
4 Bush
5 Torx screw, 5 Nm
6 Cover plate
7 Damper
8 Bearing shell
9 Gear stick guide

Copyright by Volkswagen AG. Volkswagen AG does not guarantee or accept any liability with respect to the correctness of information in this document. Copying for private or commercial purposes, in part or in whole, is not permitted unless authorised by Volkswagen AG.

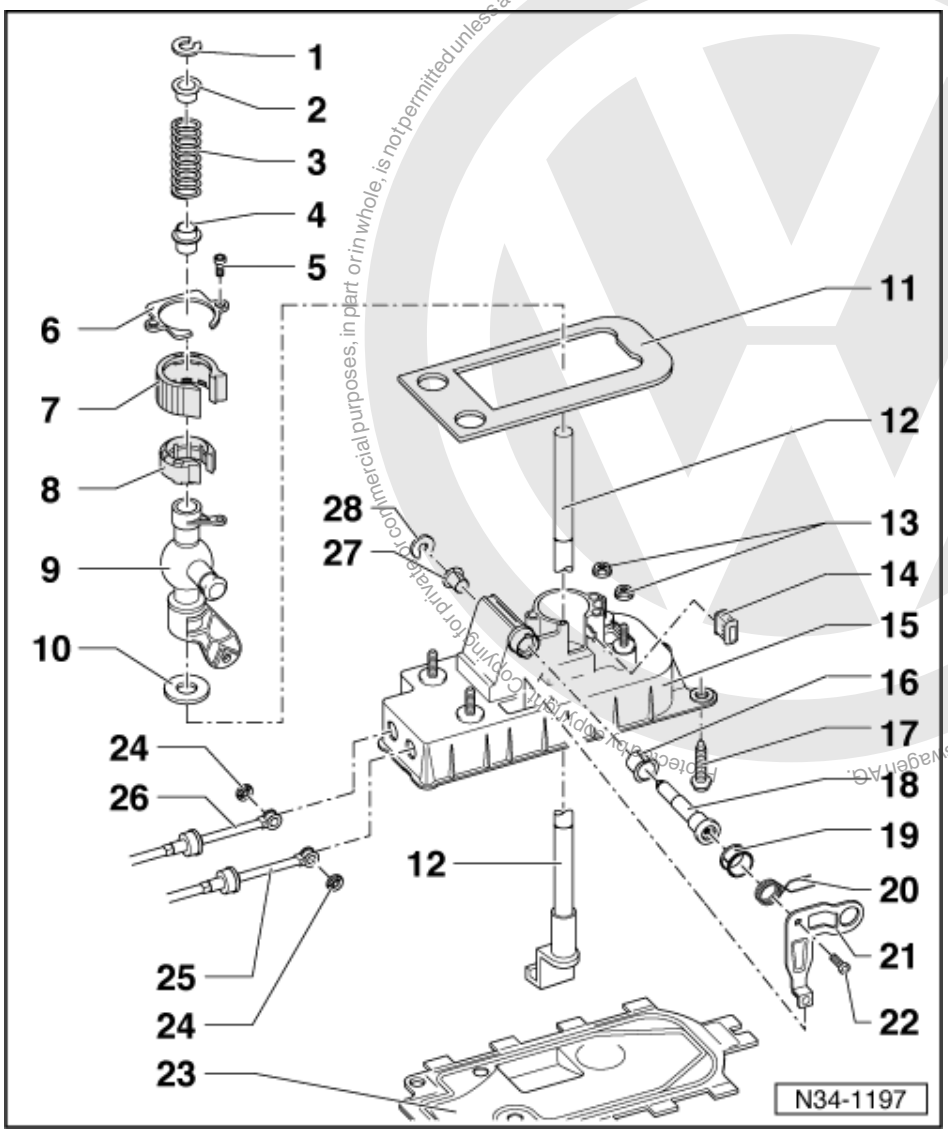

10 Damping washer

11 Gasket

- Between selector housing and floor
- Self-adhesive
- Bond to gear stick housing

12 Gearbox selector lever

13 Plastic nut

- For console on gear stick housing

14 Damper

15 Selector housing

16 Bush

17 Bolt, 25 Nm

- Qty. 4

18 Fulcrum pin

19 Guide bush

20 Spring

- Installing => Fig. 2

satelettronica

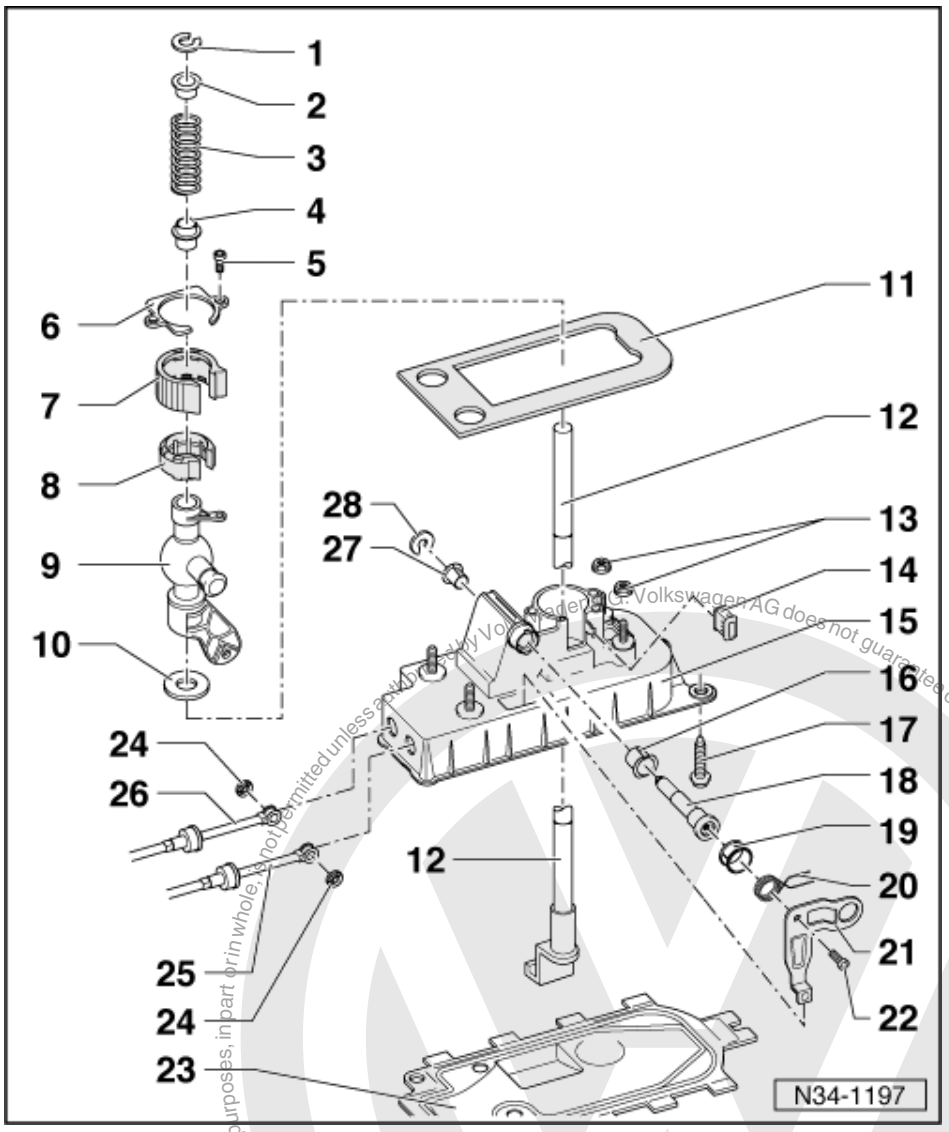

21 Gate selector bracket
22 Torx screw, 5 Nm
23 Base plate
- Open tabs to remove
- Renew

24 Lock washer
25 Gate selector cable
- On gate selector bracket
- Installation position => Page 34

26 Gear selector cable
- Press onto gear stick guide
- Installation position => Page 34

27 Bush
- Only fits in one position

28 Lock washer

Protected by copyright. Copying for private or commercial purposes, in part or in whole, is not permitted unless authorised by Volkswagen AG. Volkswagen AG does not guarantee or accept any liability with respect to the correctness of information in this document. Copyright by Volkswagen AG.
satelettronica

Protected by copyright. Copying for private or commercial purposes, in part or in whole, is not permitted unless authorised by Volkswagen AG. Volkswagen AG does not guarantee or accept any liability with respect to the correctness of information in this document. Copyright by Volkswagen AG.

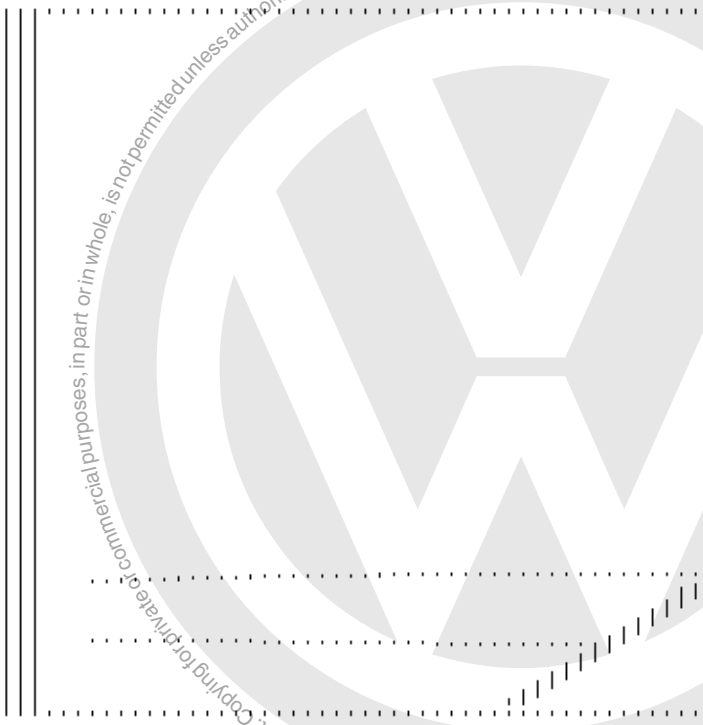

-> Fig.1 Removing and installing circlip

- To remove and install the circlip pull gear stick in arrow direction -A- and at the same time push down spacer bush onto stop with a screwdriver in arrow direction -B-.

Notes:

- Ensure spacer bush is not canted when pressing down.
- Mounting slot for circlip must be visible.
- Carefully relieve spring tension.

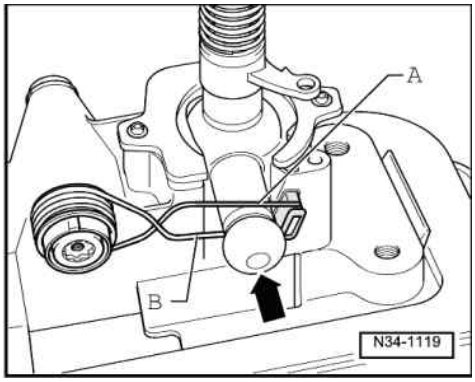

-> Fig.2 Installing spring

- Insert spring so that the spring extension -A- lies above pin (arrow).
- Then pull spring extension -B- towards gear stick until it lies on the lower section of pin (arrow).

satelettronica

1.5 - Assembly overview - removing and installing selector cables

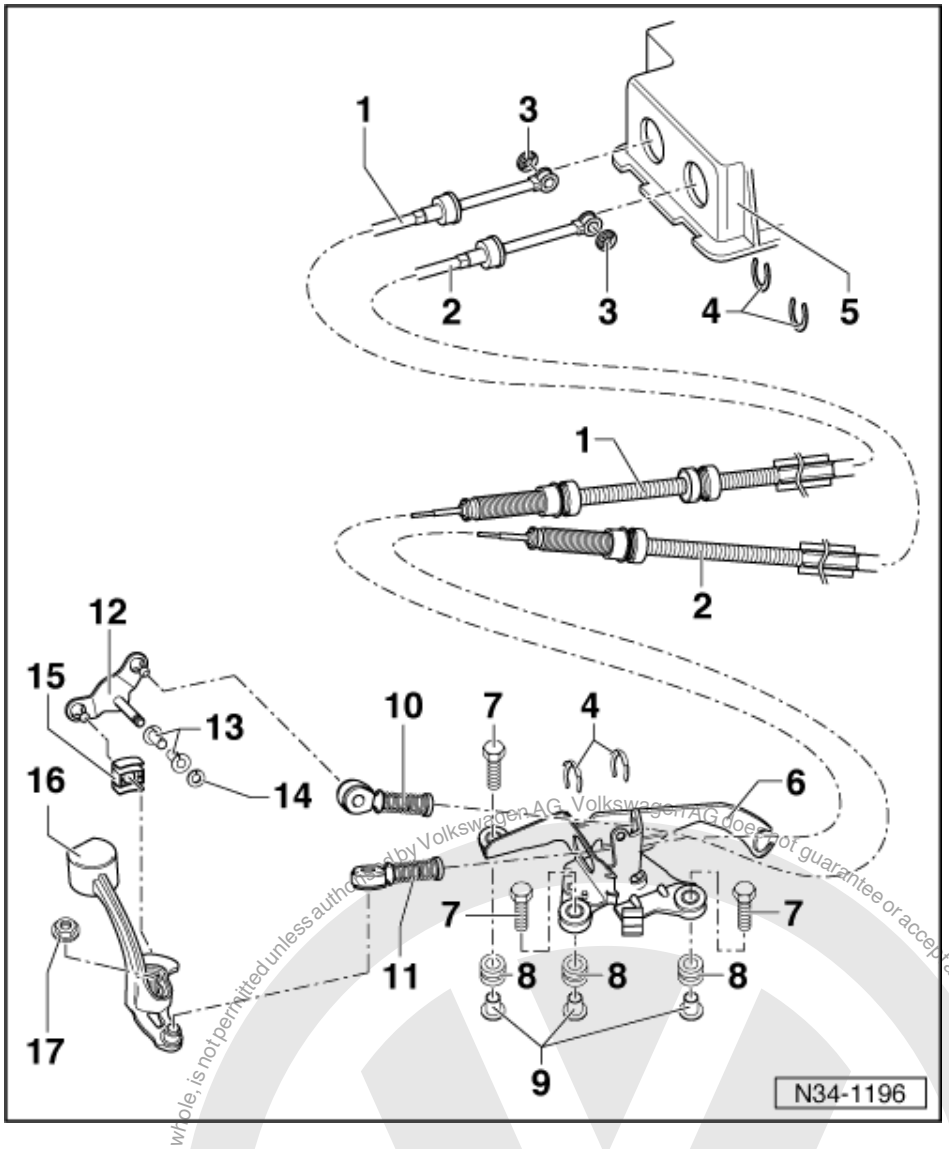

Note:

Lubricate all mountings and sliding surfaces with Polyurea grease Part No. G 052 142 A2.

1 Gear selector cable
- Press onto gear stick guide
- Installation position => Page 34

2 Gate selector cable
- On gate selector bracket
- Installation position => Page 34

3 Circlip

4 Circlip
- Do not damage cable when removing

5 Selector housing

Protected by copyright. Copyright by Volkswagen AG.
Copyright by Volkswagen AG. Volkswagen AG does not guarantee or accept any liability with respect to the correctness of information in this document.
Copying for private or commercial purposes, in part or in whole, is not permitted unless authorised by Volkswagen AG.
satelettronica

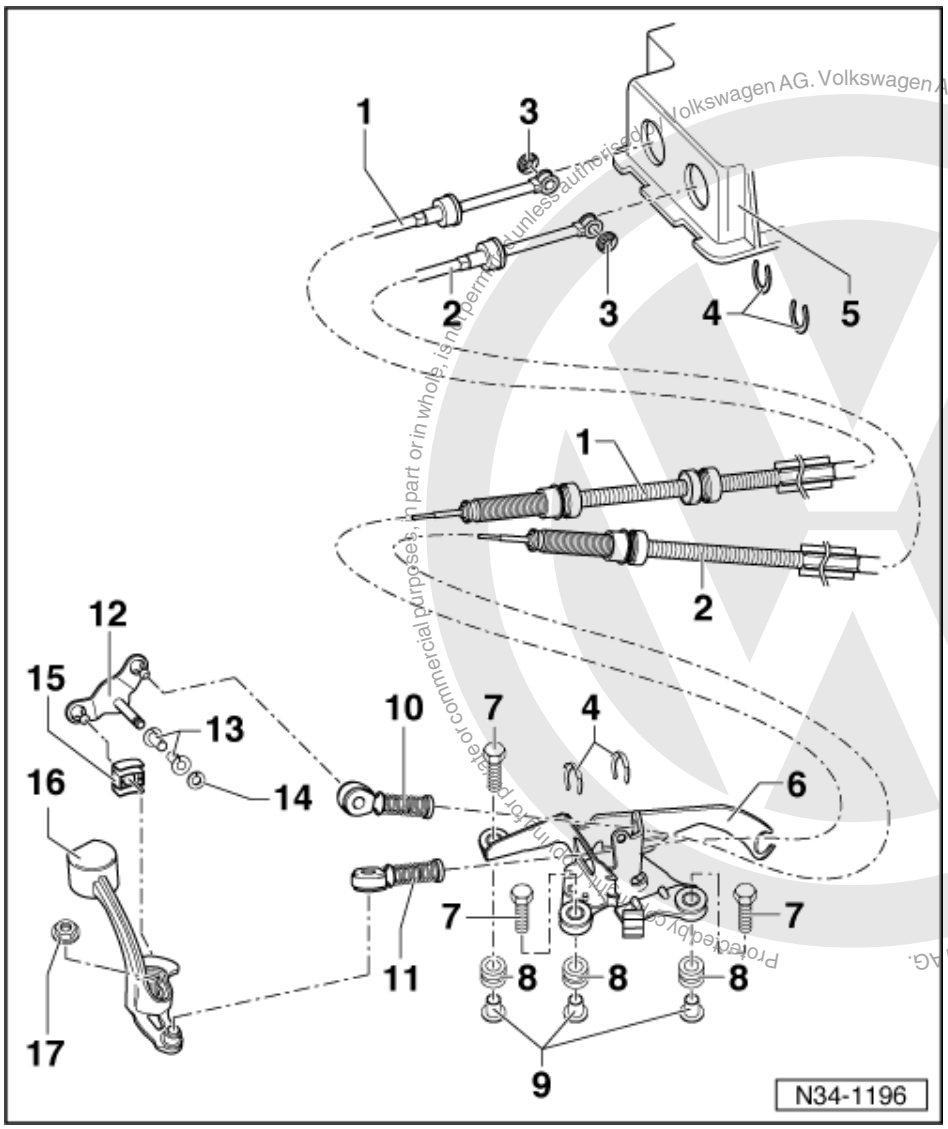

Volkswagen AG. Volkswagen AG does not guarantee or accept any liability with respect to the correctness of information in this document. Copyright by Volkswagen AG.
Protected by copyright. Copying for private or commercial purposes, in part or in whole, is not permitted unless authorised.
satelettronica

6 Support bracket
7 Hexagon bolt, 25 Nm
- For support bracket

8 Bush
- Support bracket mounting to gearbox

9 Distance piece
10 Cable locking mechanism
- For gate selector cable to relay lever

11 Cable locking mechanism
- For gear selector cable to gear change lever

12 Relay lever
- Installation position => Page 46

13 Bush

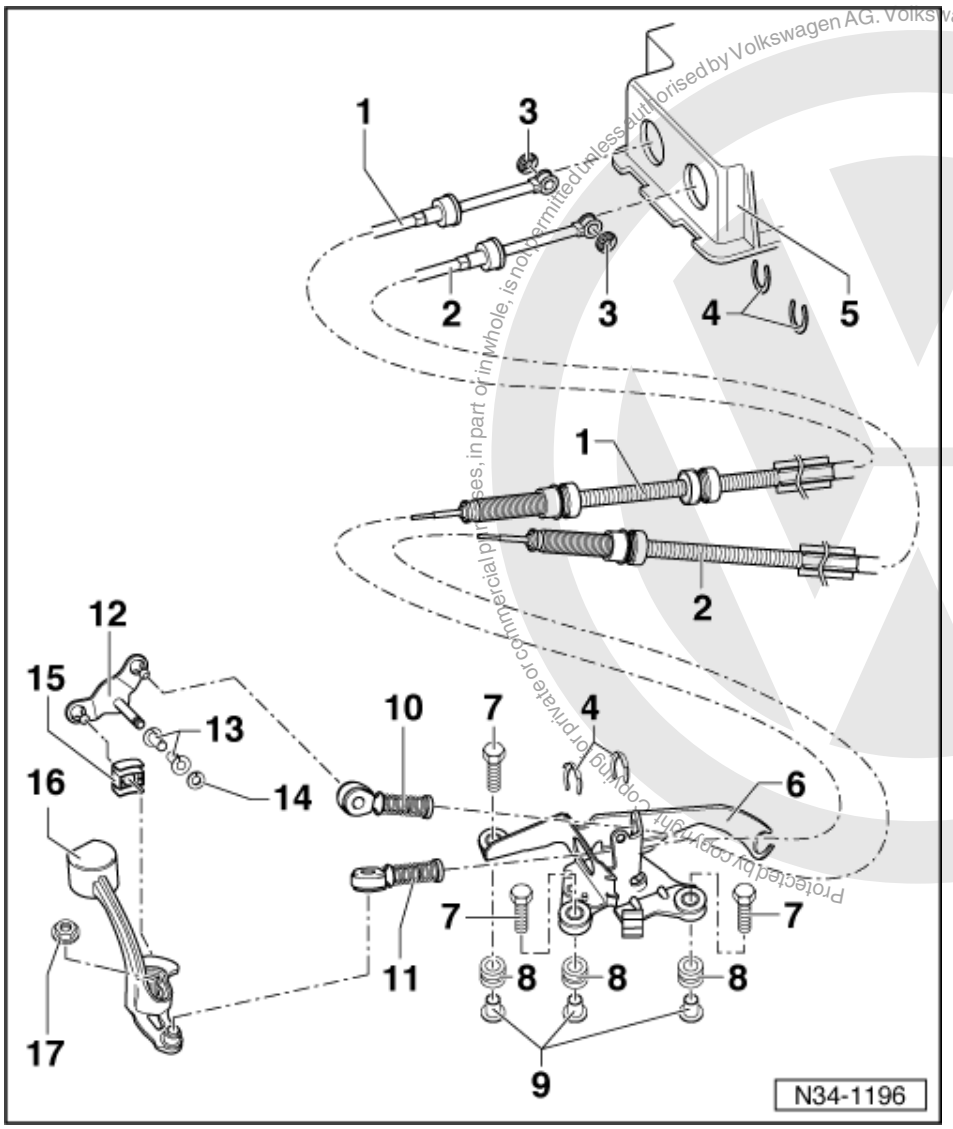

14 Circlip

15 Shoe

16 Gearbox selector lever

- With balance weight
- Install so that the master spline aligns with selector shaft
- After installing adjust gear selector mechanism => Page 48
- Installation position => Page 46

17 Hexagon nut, 25 Nm

Volkswagen AG does not guarantee or accept any liability with respect to the correctness of information in this document. Copyright by Volkswagen AG.
Protected by copyright. Copying for private or commercial purposes, in part or in whole, is not permitted unless authorised by Volkswagen AG.
satelettronica

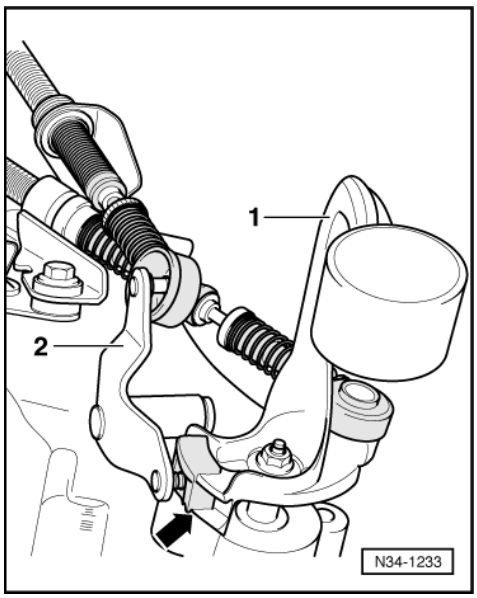

-> Installation position of gearbox selector lever/relay lever

1 - Gear selector lever
With balance weight
2 - Relay lever
Locates in guide rail of gear selector lever via shoe (arrow)

1.6 - Removing and installing gear selector mechanism

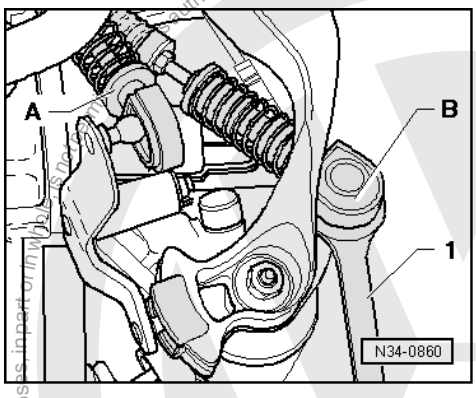

Removing

- -> Lever gate selector cable -A- and gear selector cable -B- off gearbox using an open jaw spanner.

1 = 13 mm open jaw spanner, commercially available

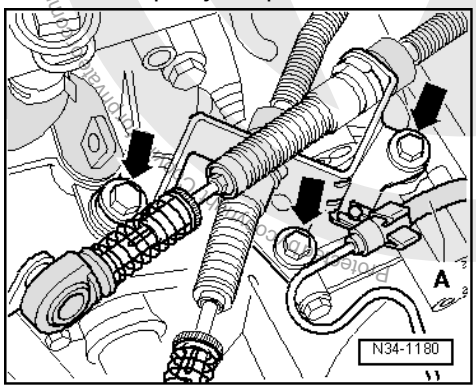

Volkswagen AG. Volkswagen AG does not guarantee or accept any liability with respect to the correctness of information in this document. Copyright by Volkswagen AG.
satelettronica

- -> Remove cable support bracket from gearbox (arrows), if necessary unclip hose -A- at cable support bracket first.
- Pull the gear stick cover off the centre console.

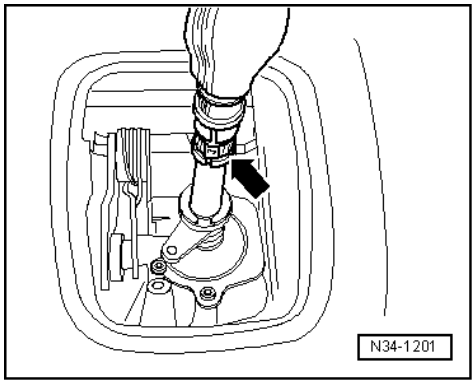

- -> Destroy clip (arrow) and pull gear stick knob off with cover.

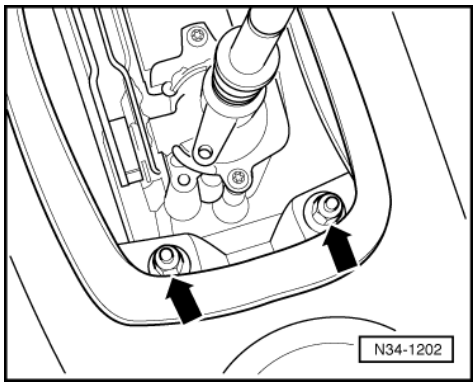

- -> Remove nuts -arrows- for console.
- Remove insulation tray below engine/gearbox, if fitted.

- Separate exhaust system after front exhaust pipe at double clamp.

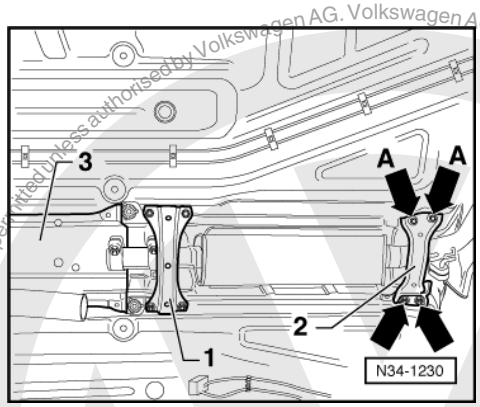

- -> Remove front cross supports -1- below the exhaust system.
- Loosen rear cross support -2-, to do this loosen nuts -arrows- (do not remove) and remove nuts -arrows A-.
- Loosen front part of rear heat shield.
- Remove front heat shield -3-.
- Unbolt selector housing from body.
- Swing gear stick housing down and remove with selector cables.

Protected by copyright. Copying for private or commercial purposes, in part or in whole, is not permitted unless authorised by Volkswagen AG. Volkswagen AG does not guarantee or accept any liability with respect to the correctness of information in this document. Copyright by Volkswagen AG.
satelettronica

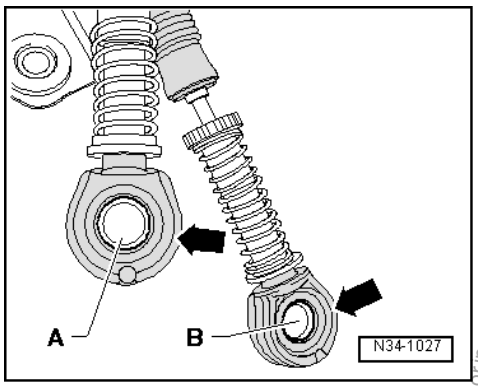

Installing

Installation is carried out in the reverse sequence, when doing this note the following:

- -> Smear a small amount of polyurea grease in recesses of cable locking mechanism -A- and gate cable locking mechanism -B-.

Note:

The seals -arrows- outside the recess must be grease free.

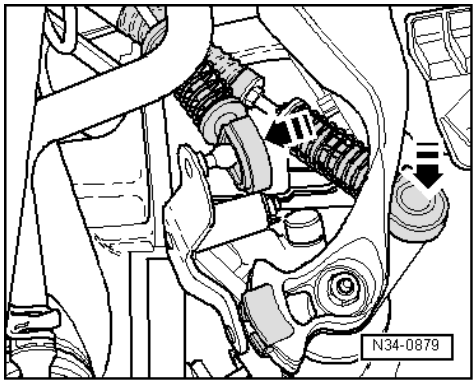

- -> Press gear selector cable onto gearbox selector lever and gate selector cable onto relay lever (arrows).

Adjusting selector mechanism => page 48 .

Tightening torques

Selector housing to body	25 Nm
Cross support to body	25 Nm
Selector cable spt. brkt to gearbox	25 Nm
Double clamp to exhaust pipe	40 Nm

1.7 - Adjusting gear selector mechanism

Special tools and workshop equipment required

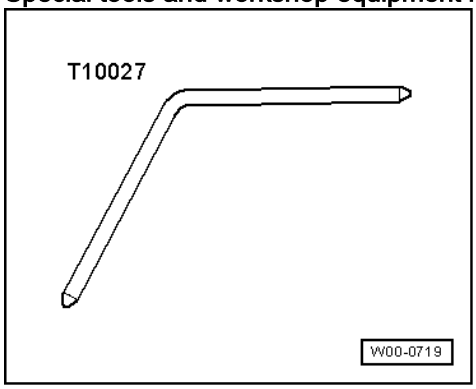

Protected by copyright. Copying for private or commercial purposes, in part or in whole, is not permitted unless authorised by Volkswagen AG. Volkswagen AG does not guarantee or accept any liability with respect to the correctness of information in this document. Copyright by Volkswagen AG.
satelettronica

- T10027 Pin

Notes:

The following points are essential to ensure correct selector adjustment:

- Moving parts of selector mechanism and transmission elements must be in proper condition.
- Selector mechanism must move freely.

The gearbox, clutch and clutch mechanism must also be in proper condition.

- Gearbox in neutral position.

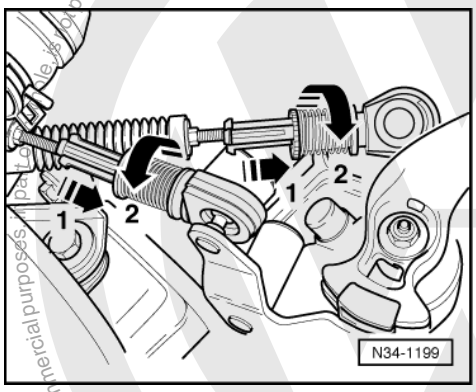

- -> Secure locking mechanism on gear selector cable and gate selector cable by pulling forwards in direction of arrow -1- onto stop and then turn to left in direction of arrow -2- to lock.

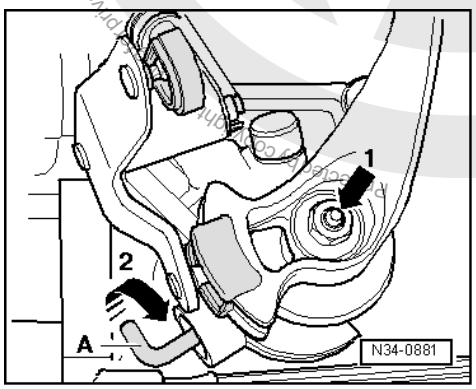

-> Set selector shaft as follows:

- Press selector shaft down (direction of arrow -1-).
- Turn right-angle piece -A- in direction of arrow -2- when pressing selector shaft down.
- Pull the gear stick cover off the centre console.

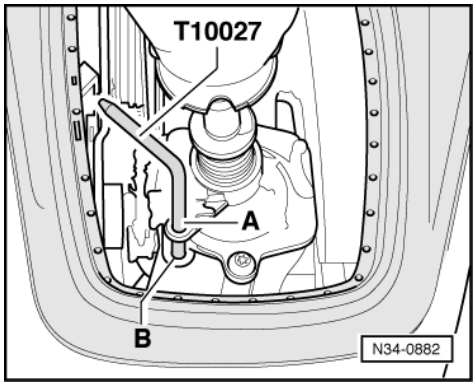

satelettronica

-> Set gear stick as follows:

- Select neutral with gear stick.
- Then guide pin T10027 through hole -A- and into hole -B-.

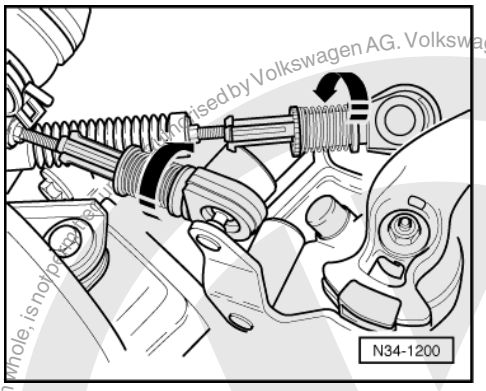

-> Now turn locking mechanism on gear selector cable and gate selector cable to right onto stop (direction of arrow).

The spring presses the locking mechanism into normal position.

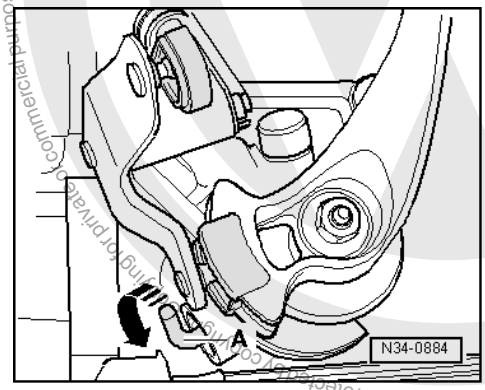

- -> Now turn right-angled piece -A- back to original position (direction of arrow).

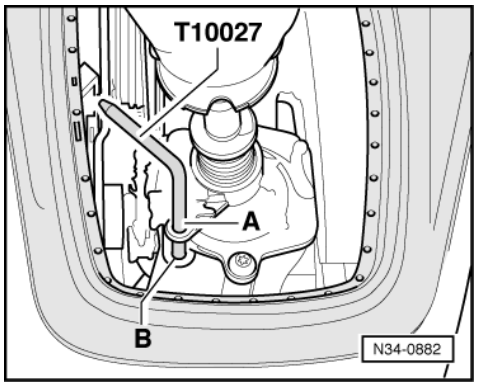

- -> Pull pin T10027 out of holes -A- and -B-.
- Clip cover into frame.

Functional check

- The gear stick lever must rest in the 3rd/4th gear gate with gearbox in neutral.

- Operate clutch.
- Select all gears several times. Pay particular attention to the operation of the reverse gear lock.

Copyright by Volkswagen AG. Volkswagen AG does not guarantee or accept any liability with respect to the correctness of information in this document. Copyright by Volkswagen AG. Copying for private or commercial purposes, in part or in whole, is not permitted unless authorised by Volkswagen AG.
satelettronica

Should a gear fail to engage smoothly after repeated selection, the selector shaft play (lift) should be checked as follows:

- Engage 1st gear.
- Press gear stick to left onto stop and release.
- At the same time observe selector shaft in gear box (2nd mechanic).

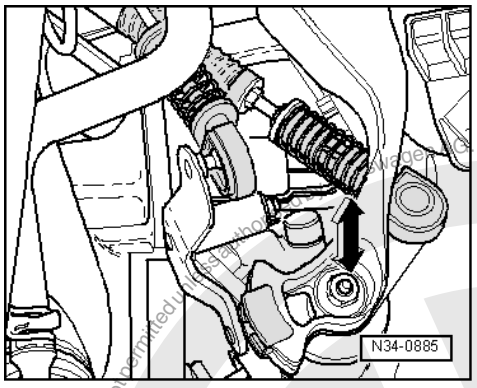

- -> When moving the gear stick the selector shaft must move approx. 1 mm (in direction of arrow).
- If this is not the case, adjust selector mechanism =>Page 48 .

Volkswagen AG does not guarantee or accept any liability with respect to the correctness of information in this document. Copyright by Volkswagen AG.
Protected by copyright. Copying for private or commercial purposes, in part or in whole, is not permitted unless authorised by Volkswagen AG.
satelettronica

2 - Removing and installing gearbox

2.1 - Removing and installing gearbox

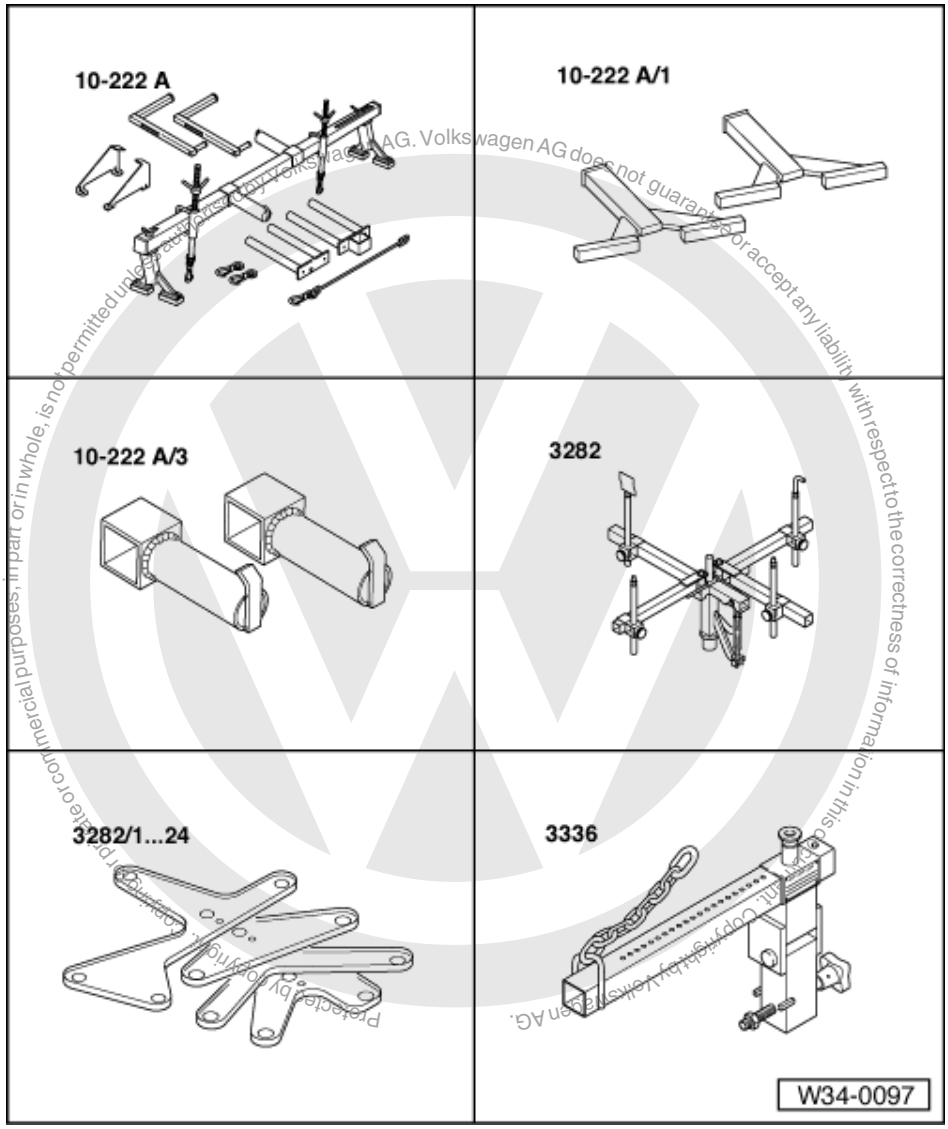

Protected by copyright. Copying for private or commercial purposes, in part or in whole, is not permitted unless authorised by Volkswagen AG. Volkswagen AG does not guarantee or accept any liability with respect to the correctness of information in this copyright. Copyright by Volkswagen AG.

satelettronica

Special tools and workshop equipment required

- 10-222 A Support
- 10-222 A/1 Support
- 10-222 A/3 Adapter
- 3282 Gearbox support
- 3282/8 Adjustment plate
- 3336 Gearbox lifting beam

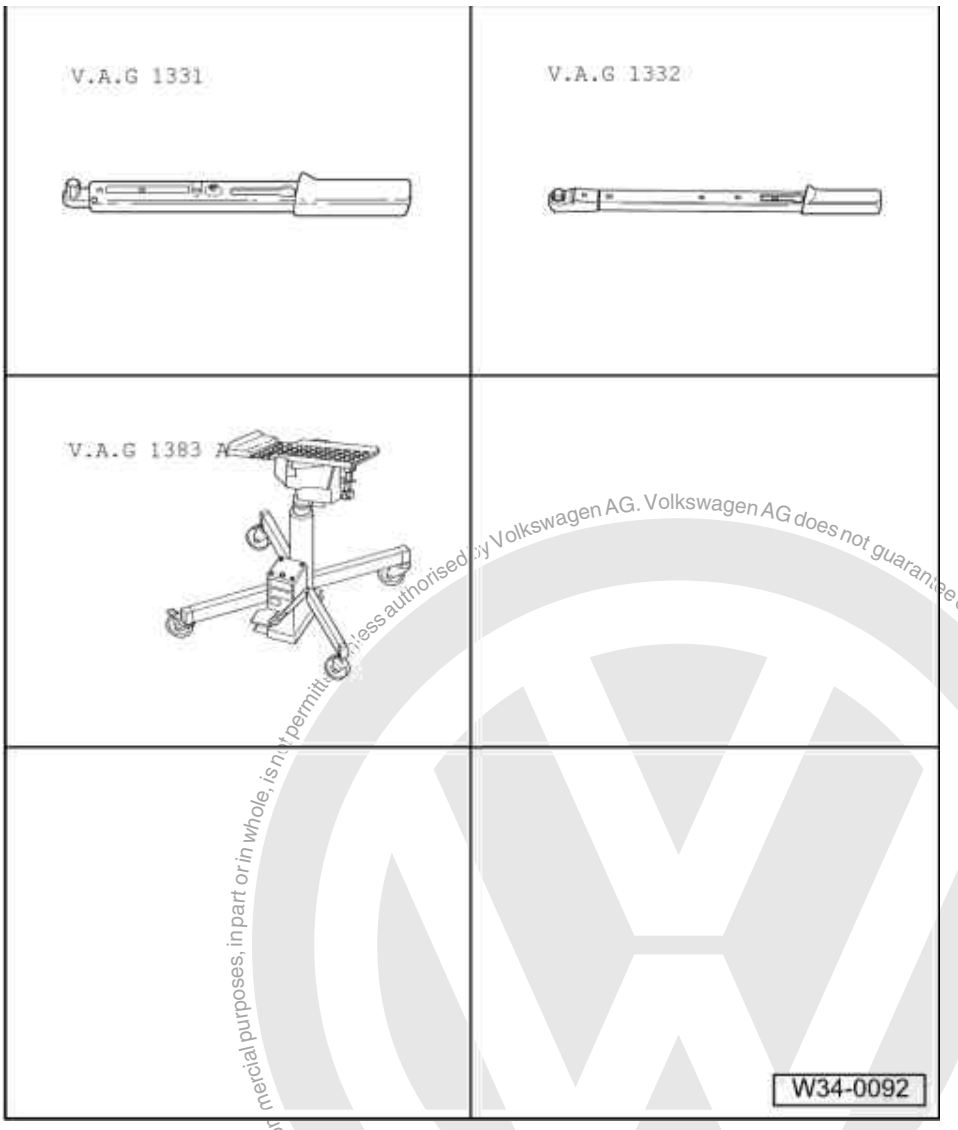

Special tools and workshop equipment required

- V.A.G 1331 Torque wrench
- V.A.G 1332 Torque wrench
- V.A.G 1383 A Gearbox jack

Removing

- Remove cover from engine.
- First check whether a coded radio is fitted. If this is the case obtain the anti-theft coding.

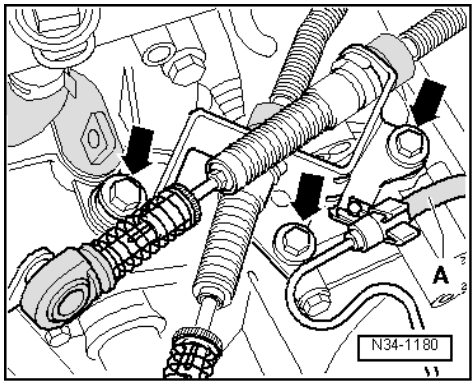

satelettronica

- With the ignition switched off disconnect the battery earth strap.
- Install battery.
- Remove battery carrier.
- -> Remove cable support bracket from gearbox (arrows), if necessary unclip hose -A- at cable support bracket first.

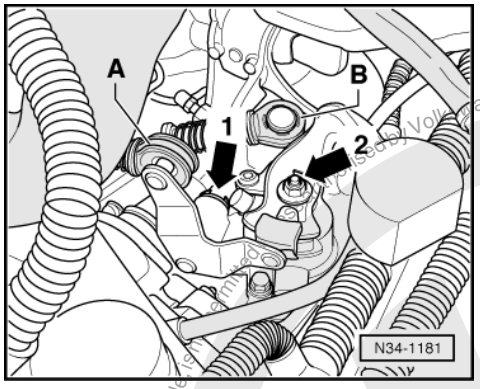

- -> Pull off gate selector cable -A- with relay lever, remove circlip -arrow 1- to do this.
- Remove gear selector cable -B- with gearbox selector lever, remove nut -arrow 2- to do this.
- Pull off gearbox selector lever, if necessary use puller Kukko 20-10.

- Tie selector cable with gearbox selector lever and gate selector cable with relay lever up.

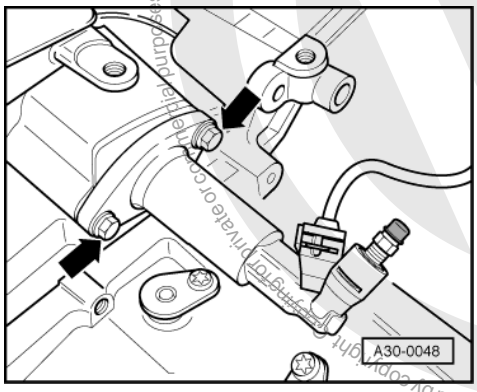

- -> Remove slave cylinder -arrows-, place to side and secure with wire, do not disconnect pipes.

Note:

Do not depress clutch pedal.

- Remove earth strap at engine/gearbox upper securing bolt.

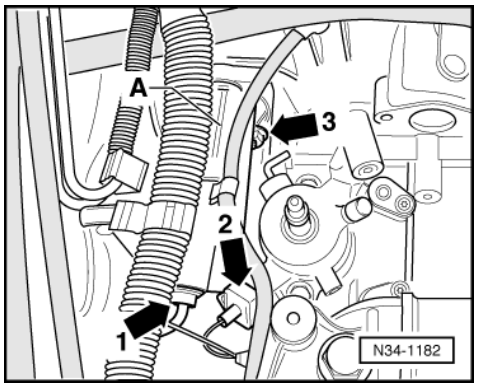

- -> Remove connector (arrow 1) from starter.
- Pull off reverse light connector (arrow 2).
- Remove cable retainer (arrow 3) on starter.

Printed by Volkswagen AG. Volkswagen AG does not guarantee or accept any liability with respect to the correctness of information in this document. Copyright by Volkswagen AG.
Copyright for private or commercial purposes, in part or whole is not permitted unless authorised by Volkswagen AG.
satelettronica

- Then remove upper securing bolt on starter.

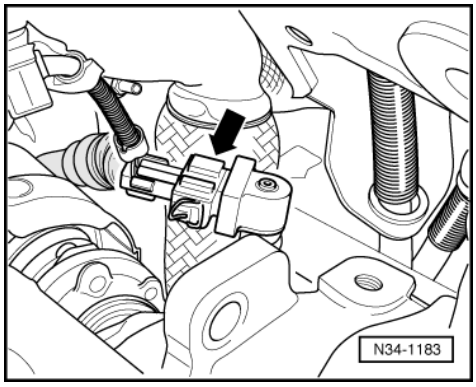

- -> Pull connector off speedometer sender (arrow).

- Remove engine/gearbox upper securing bolts.
- If there are hoses and cable connections in area of engine mounting eye for support 10-222A, remove these now.
- Remove left and right guides from wing.

=> General body repairs, exterior; Repair group 55; Bonnet Bonnet

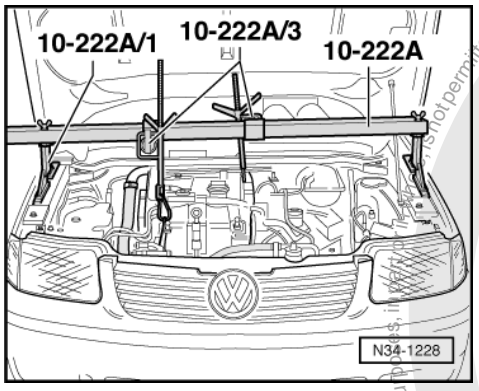

- -> Fit support bar 10-222A together with legs 10-222 A/1 and adapters 10-222 A/3 .
- Take weight of engine/gearbox assembly on the spindles.
- Remove insulation tray below engine/gearbox, if fitted.
- Remove starter.

=> Repair group 27; Removing and installing starter. Removing and installing starter.
- Remove right hand inner constant velocity joint protective cover from engine if fitted.

- Turn wheels fully onto left lock.

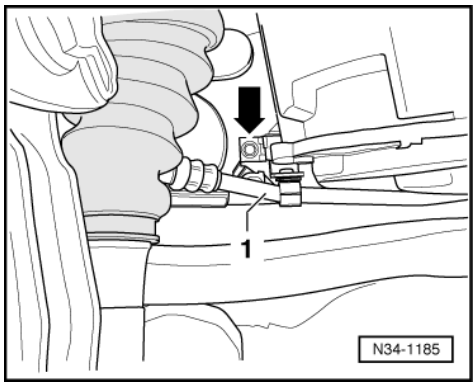

- Disconnect drive shafts from flanged shafts and tie up as high as possible, when doing this do not damage surface protection.

satelettronica
Protected by copyright. Copying for private or commercial purposes, in part or in whole, is not permitted unless authorised by Volkswagen AG. Volkswagen AG does not guarantee or accept any liability with respect to the correctness of information in this document. Copyright by Volkswagen AG.

- -> Remove P.A.S pipe -1- from gearbox console -arrow-.

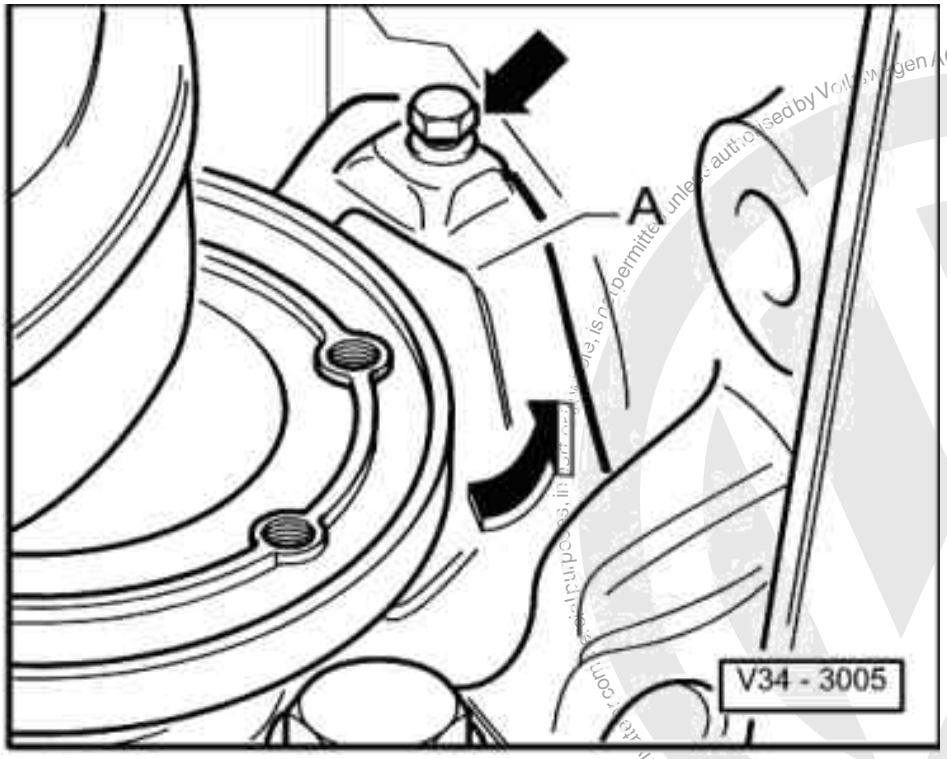

- -> Remove flywheel small cover plate -A- behind the right-hand flanged shaft (arrows), if fitted.
- Separate exhaust system after front exhaust pipe at double clamp.

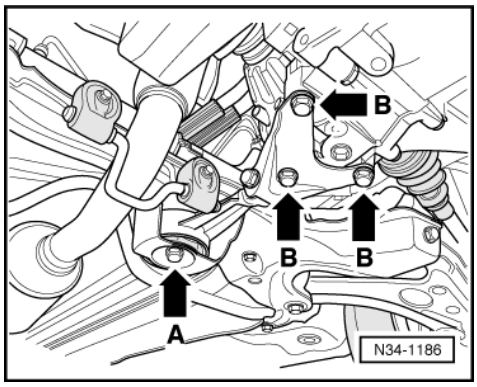

- -> Remove pendulum support (arrows A and B).

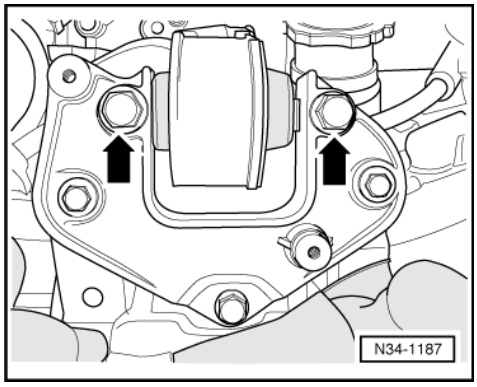

- -> Remove hexagon bolts -arrows- of left-hand assembly mounting from gearbox.
- Incline the engine/gearbox assembly by lowering it via the left spindle of support bar 10-222A .

Protected by copyright. Copyright by Volkswagen AG.
Volkswagen AG does not guarantee or accept any liability with respect to the correctness of information in this document.
satelettronica

Note:

Ensure the sump does not lie against the assembly mounting when lowering the engine/gearbox assembly.

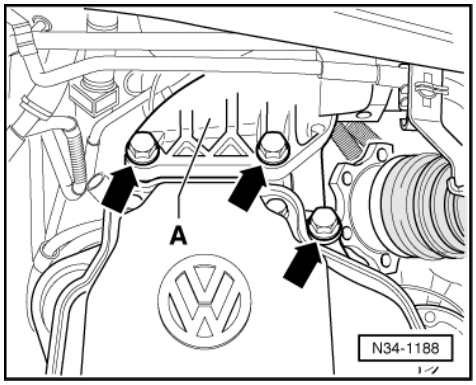

- The gearbox console -A- securing bolts (arrows) must be accessible.

- -> Remove gearbox console -A- (arrows).
- Assemble gearbox jack with gearbox support 3282, adjustment plate 3282/8 for "02A" gearbox and support elements as follows:
- Place adjustment plate 3282/8 on gearbox support 3282. (Adjustment plate only fits in one position).
- Align arms of gearbox support according to holes in adjustment plate.

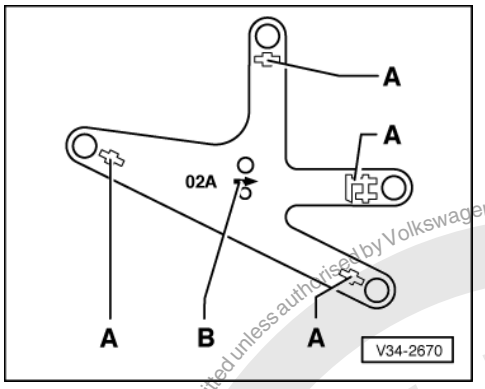

- -> Bolt on support elements -A-, as illustrated, on adjustment plate.

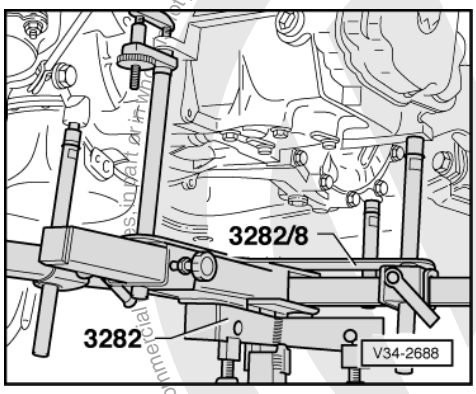

- -> Place gearbox jack under vehicle, arrow symbol -B- (=> Illustration V34-2670) on adjustment plate points to front of vehicle.
- Align adjustment plate parallel to gearbox and lock safety supports on gearbox.
- Remove lower engine/gearbox securing bolts.

satelettronica
Protected by copyright. Copying for private or commercial purposes, in part or in whole, is not permitted unless authorised by Volkswagen AG. Volkswagen AG does not guarantee or accept any liability with respect to the correctness of information in this document. Copyright by Volkswagen AG.

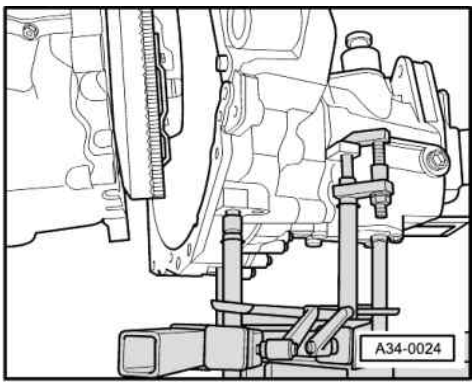

- -> Press gearbox off dowels and carefully swing towards sub-frame.

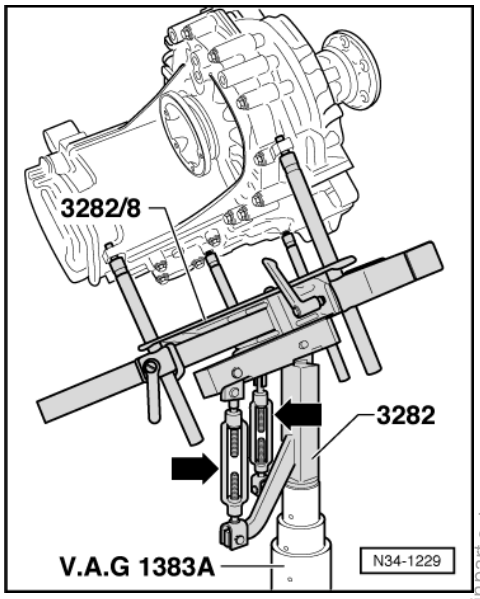

- -> When lowering the gearbox, change position of gearbox using the gearbox support 3282 spindles -arrows- so that the rear gearbox (differential) is upwards.
- Both spindles -arrows- must be turned onto the stop as illustrated in the diagram.

- Press engine forwards carefully with the help of a second mechanic.

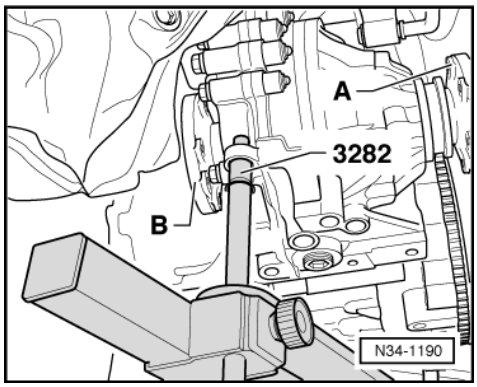

- -> Then lower gearbox carefully, when doing this guide right-hand flange shaft -A- in area of flywheel as illustrated and guide left-hand flange shaft -B- in area of subframe.

Note:

Do not damage P.A.S pipe when lowering gearbox.

Protected by copyright. Copying for private or commercial purposes, in part or in whole, is not permitted unless authorised by Volkswagen AG. Volkswagen AG does not guarantee or accept any liability with respect to the correctness of information in this document. Copyright by Volkswagen AG.
satelettronica

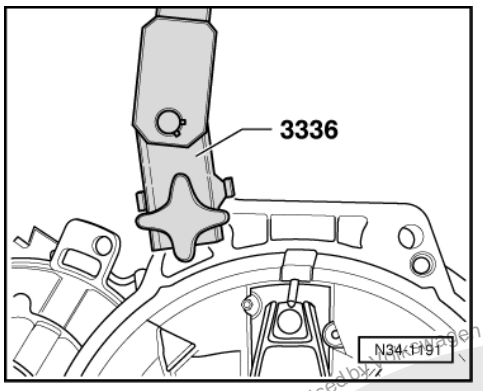

Transporting the gearbox

- -> Bolt gearbox lifting device 3336 to clutch housing.

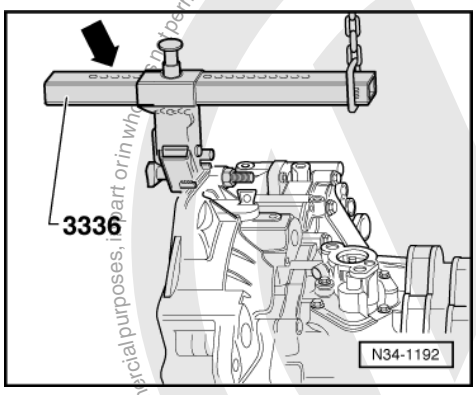

- -> Set support arm on sliding piece with locking pin (arrow).

No. of holes visible = 5

- Lift gearbox with workshop crane and gearbox lifting device 3336.
- Place gearbox, for example onto transport container.

Protected by copyright. Copyright by Volkswagen AG.
Copyright by Volkswagen AG. Volkswagen AG does not guarantee or accept any liability with respect to the correctness of information in this document.
satelettronica

Protected by copyright. Copyright by Volkswagen AG. Volkswagen AG does not guarantee or accept any liability with respect to the correctness of information in this document. Copyright by Volkswagen AG. Reproduction in part or in whole, is not permitted unless authorised by Volkswagen AG. Volkswagen AG does not guarantee or accept any liability with respect to the correctness of information in this document. Copyright by Volkswagen AG.

satelettronica

Installing

Notes:

- -> Before installing gearbox press clutch release lever towards gearbox housing and secure with assembly pin, assembly bolt or M 8 x 35 bolt. Remove after gearbox has been installed. The hole will then be sealed by the 3rd cable support bracket securing bolt or plugged.

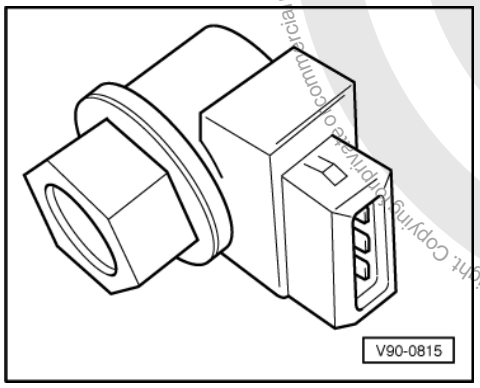

- -> When replacing gearbox, the senders for speedometer (Fig.), gear selector and relay lever must be transferred to new assembly.

- Clean input shaft splines and lightly grease with G000 100 grease.

The clutch plate must be able to slide lightly to and fro on the input shaft.

- Check whether dowel sleeves for aligning engine/gearbox are fitted in cylinder block, install if necessary.
- Ensure that the intermediate plate is correctly positioned on engine.

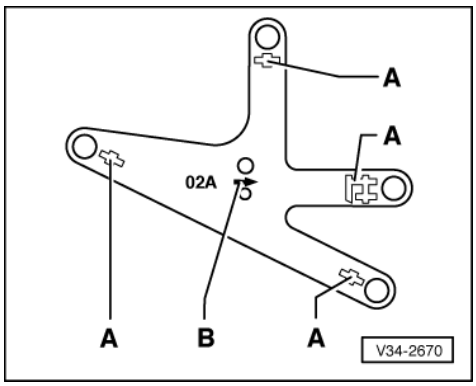

- Assemble gearbox jack with gearbox support 3282, adjustment plate 3282/8 for "02A" gearbox and support elements as follows:
- Place adjustment plate 3282/8 on gearbox support 3282. (Adjustment plate only fits in one position).
- Align arms of gearbox support according to holes in adjustment plate.
- -> Bolt on support elements -A-, as illustrated, on adjustment plate.

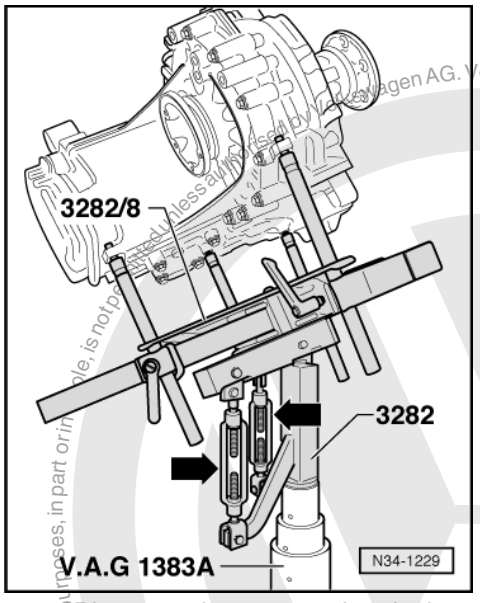

- -> Place gearbox on gearbox jack.
- When lowering the gearbox change position of gearbox using the gearbox support 3282 spindles.
- Both spindles -arrows- must be turned onto the stop as illustrated in the diagram.

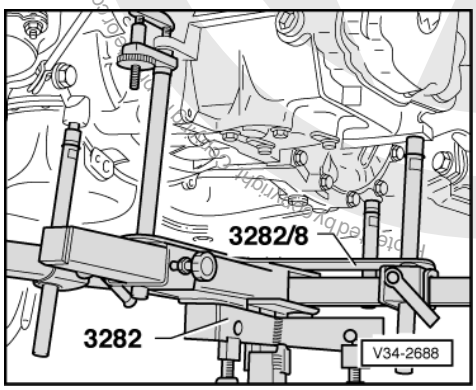

- Align adjustment plate and gearbox parallel with one another and lock safety supports on gearbox.
- -> Place gearbox jack under vehicle, arrow symbol -B- (=> Illustration V34-2670) on adjustment plate points to front of vehicle.
- Insert gearbox.

satelettronica

Note:

Do not damage P.A.S pipe.

- Install lower engine/gearbox securing bolts.

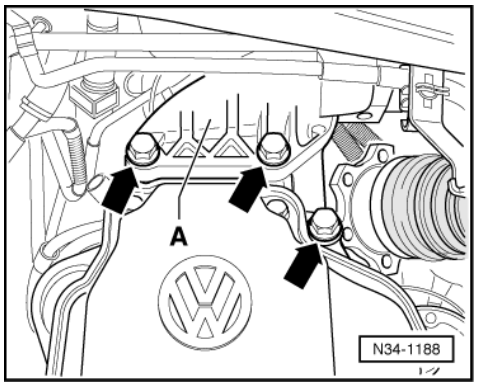

- -> Fit gearbox console -A- with new bolts (arrows).

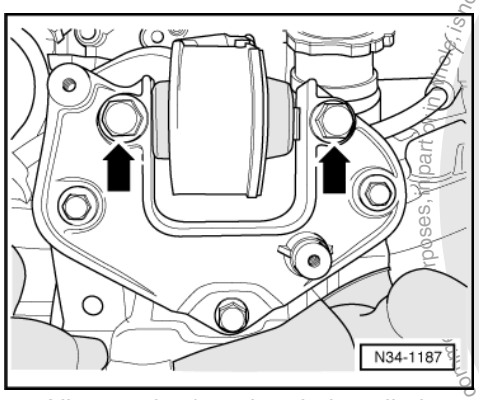

- Align engine/gearbox in installation position.
- -> Install new hexagon bolts -arrows- for left hand assembly mounting in gearbox mounting.

Warning!
Do not remove support bar 10-222A until the bolts securing the left-hand gearbox console have been tightened to torque setting.

- Install upper engine/gearbox securing bolts.

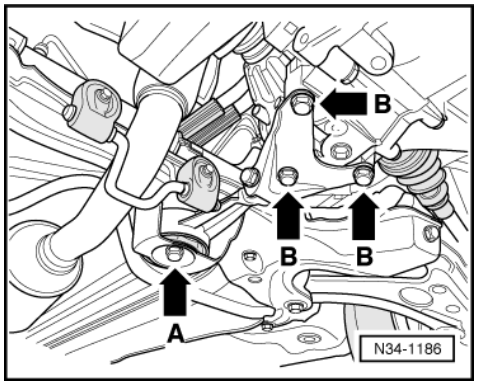

- -> Install pendulum support -arrows A and B-.
- Use new bolts for securing.
- Reconnect exhaust system.

Protected by copyright. Copying for private or commercial purposes, in part or in whole, is not permitted unless authorised by Volkswagen AG. Volkswagen AG does not guarantee or accept any liability with respect to the correctness of information in this document. Copyright by Volkswagen AG.
satelettronica

=> Repair group 26; Removing and installing parts of the exhaust system. Removing and installing parts of the exhaust system.

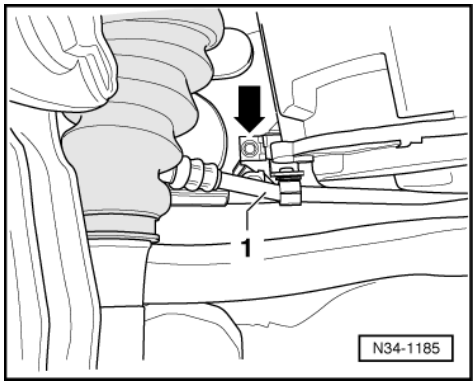

- -> Install P.A.S pipe -1- to gearbox console -arrow-.
- Install starter.

=> Repair group 27; Removing and installing starter. Removing and installing starter.

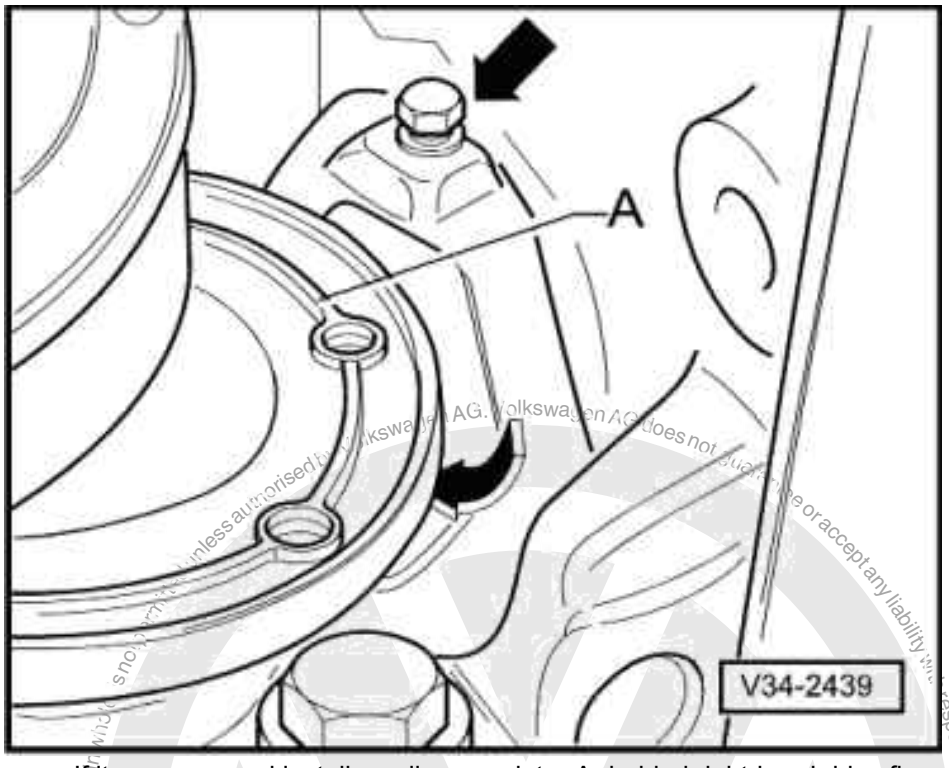

- -> If it was removed install small cover plate -A- behind right-hand drive flange (arrows).
- Fit drive shafts to gearbox.

=> Running gear, axles, steering; Repair group 40; Servicing drive shafts, Removing and installing drive shafts Servicing drive shafts, Removing and installing drive shafts

- Install right-hand drive shaft protective cover if necessary.

satelettronica

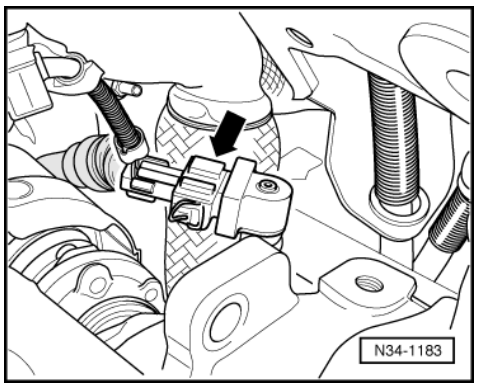

- -> Attach connector to speedometer sender (arrow).

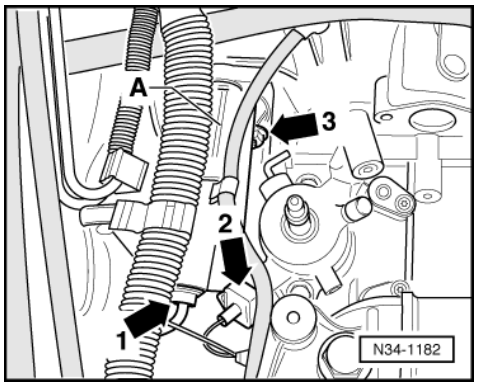

- -> Install cable retainer -A- on starter (arrow 3).
- Attach connectors for starter (arrow 1) and reversing light (arrow 2).

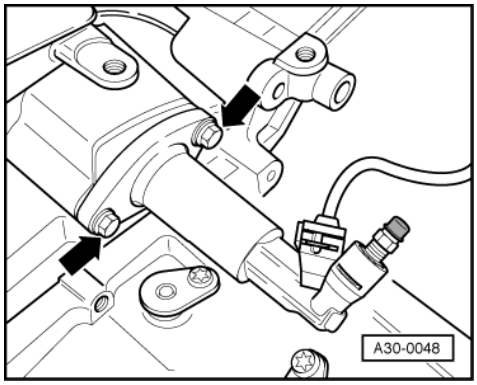

- -> Install slave cylinder -arrows-.

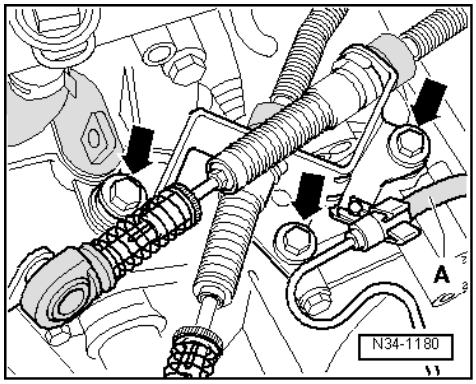

Protected by copyright. Copying for private or commercial purposes, in part or in whole, is not permitted unless authorised by Volkswagen AG. Volkswagen AG does not guarantee or accept any liability with respect to the correctness of information in this document. Copyright by Volkswagen AG.
satelettronica

- -> Install cable support bracket on gearbox -arrows-, if necessary push hose -A- onto cable support bracket.

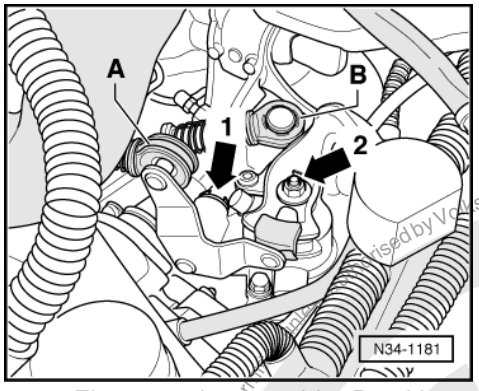

- -> Fit gear selector cable -B- with gearbox selector lever (arrow 2).
- Fit gate selector cable -A- with relay lever and secure with a circlip (arrow 1).
- Install guide to wing.

=> General body repairs, exterior; Repair group 55; Bonnet Bonnet

- Install battery carrier.
- Install battery.
- Reconnect earth strap to battery.

Note:

Note radio coding for vehicles with coded radio.

- Check gearbox oil =>Page 67 .
- Specifications => Page 2 .
- Bleed clutch system =>page 25 .
- Adjusting gear selector mechanism => Page 48 .
- Install engine cover.
- Install insulation tray below engine/gearbox, if fitted.

Tightening torques

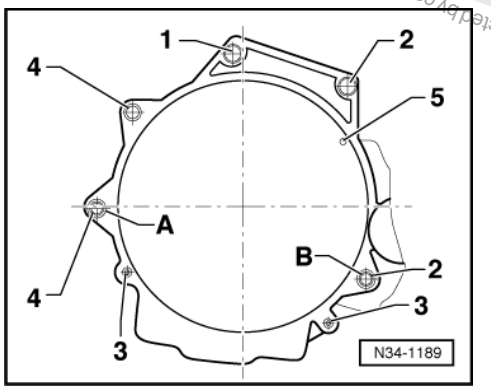

-> Gearbox to engine

Item	Bolt	Qty.	Nm
11)	M 12 x 55	1	80
2	M 12 x 55	2	80
3	M 10 x 50	2	40
42)	M 12 x 150	2	80
53)	M 6 x 8	1	10

Protected by copyright. Copyright by Volkswagen AG.
Copyrighted by Volkswagen AG. Volkswagen AG does not guarantee or accept any liability with respect to the correctness of information in this document.
satelettronica

1) Stud with drive
2) Also starter to gearbox
3) Small cover plate for flywheel

Items A + B - Dowel sleeves

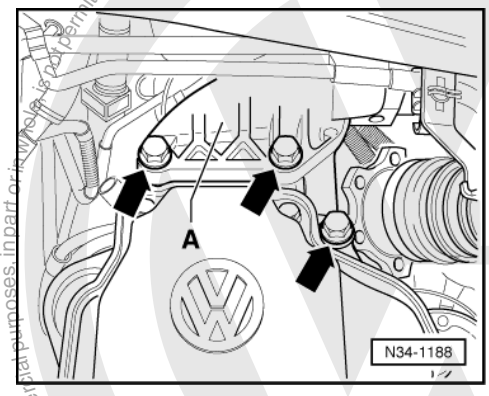

-> Gearbox console -A- to gearbox

Bolts -arrows-	40 Nm + 90 °

- Renew bolts

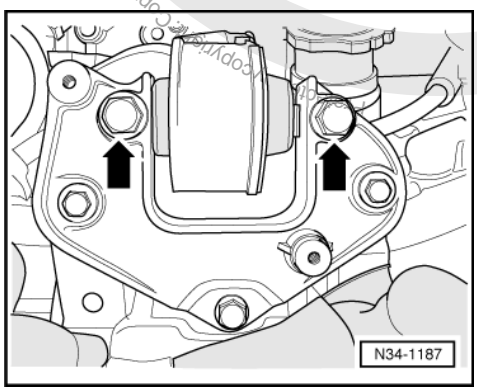

-> Gearbox to body

Bolts -arrows-	40 Nm + 90 °

- Renew bolts

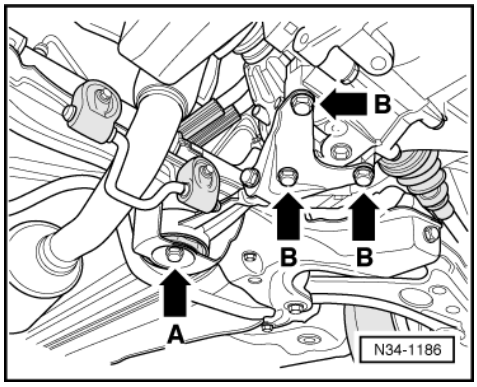

Copyright by Volkswagen AG. Volkswagen AG does not guarantee or accept any liability with respect to the correctness of information in this document. Copying for private or commercial purposes, in part or in whole, is not permitted unless authorised by Volkswagen AG.

satelettronica

-> Rear gearbox mounting

Bolt -A-	90 Nm + 90°
Bolts -B-	40 Nm + 90°

- Renew bolts

Note:

Install engine/gearbox mountings stress-free.

=> Repair group 10; Removing and installing engine. Removing and installing engine.

Selector cable spt. brkt to gearbox	25 Nm
Gearbox selector lever to gearbox	25 Nm
Drive shaft protective cover to engine	35 Nm
Slave cylinder to gearbox	20 Nm

3 - Checking gear oil

3.1 - Checking gear oil

Gear oil specification => Page 2

- Remove insulation tray below engine/gearbox, if fitted.

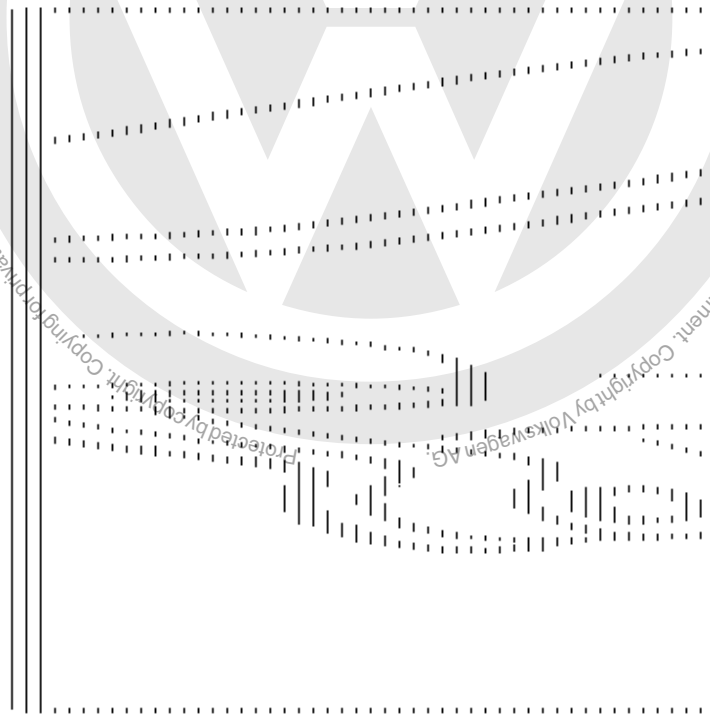

- -> Remove plug (arrow) to check oil

The oil level is correct when the gearbox is full to the lower edge of the filler hole.

- Fit plug (arrow).

Protected by copyright. Copying for private or commercial purposes, in part or in whole, is not permitted unless authorised by Volkswagen AG. Volkswagen AG does not guarantee or accept any liability with respect to the correctness of information in this document. Copyright by Volkswagen AG.
satelettronica

When filling with new oil note following:
- Remove plug (arrow).
- Top up oil to lower edge of filler hole.
- Fit plug (arrow).
- Start engine, engage gear and allow gearbox to turn for approx. 2 minutes.
- Switch off engine and remove plug (arrow).
- Top up oil to lower edge of filler hole again.
- Fit plug (arrow).

4 - Dismantling and assembling gearbox

4.1 - Dismantling and assembling gearbox

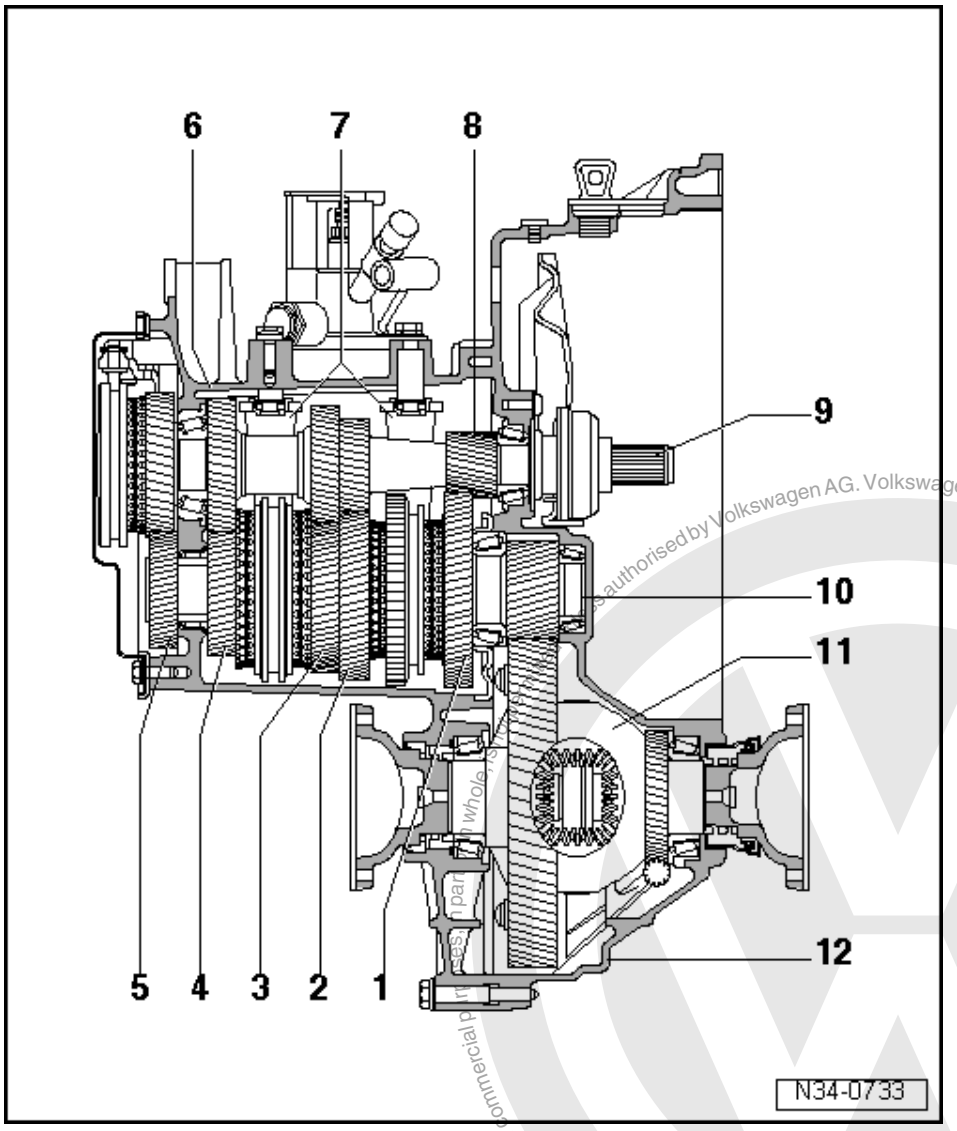

4.2 - Overview

1 1st gear
2 2nd gear
3 3rd gear
4 4th gear

satelettronica
Protected by copyright. Copying for private or commercial purposes, in part or whole, is not permitted unless authorised by Volkswagen AG. Volkswagen AG does not guarantee or accept any liability with respect to the correctness of information in this document. Copyright by Volkswagen AG.

5 5th gear
6 Gearbox housing
- Servicing => page 97

7 Selector mechanism
- (Selector forks)
- Dismantling and assembling => Page 113

8 Input gear for 1st and reverse gear

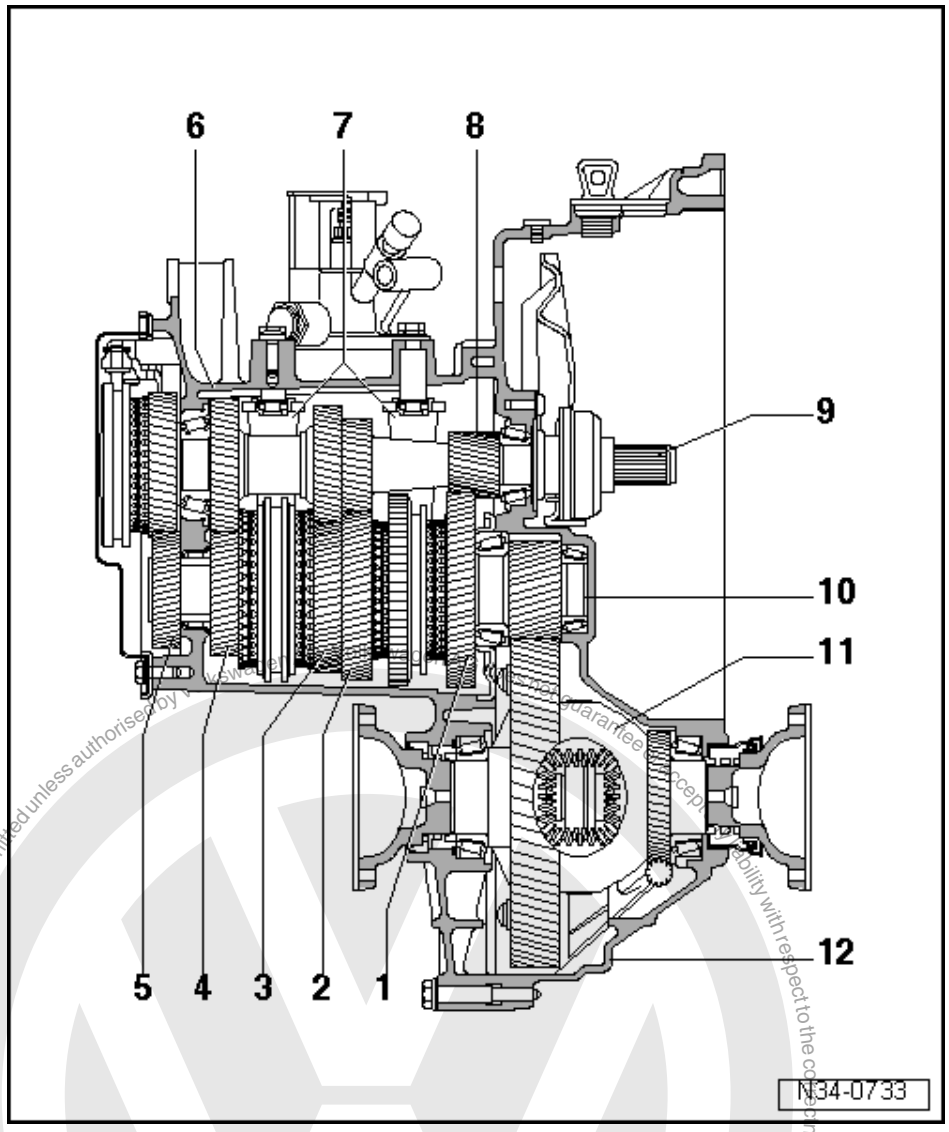

9 Input shaft
- Dismantling and assembling => page 120

10 Output shaft
- Dismantling and assembling => Page 138

11 Differential
- Dismantling and assembling => page 182

12 Clutch housing
- Servicing => Page 97

satelettronica
Protected by copyright. Copying for private or commercial purposes, in part or in whole, is not permitted unless authorised by Volkswagen AG. Copyright by Volkswagen AG.

4.3 - Assembly overview

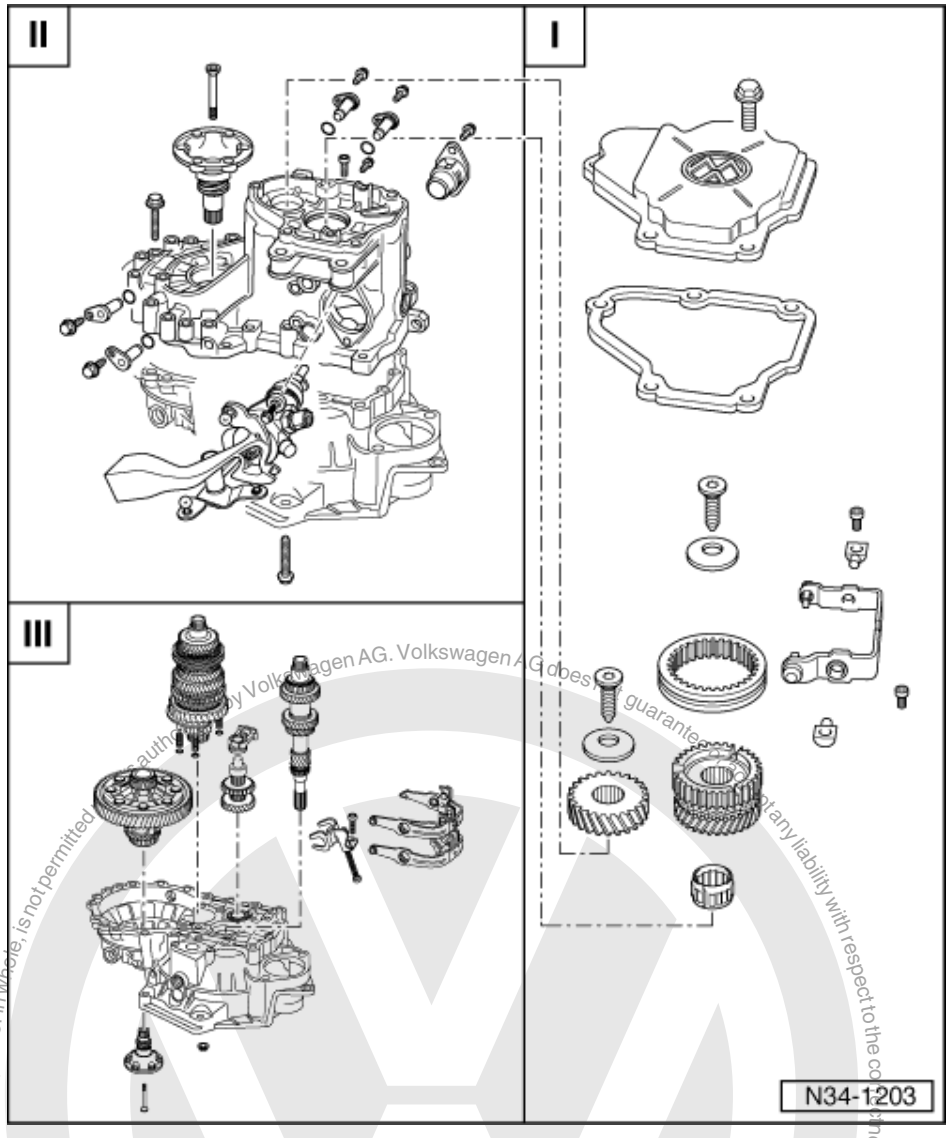

I - Removing and installing cover for gearbox housing and 5th gear => Page 71

II - Dismantling and assembling gearbox housing and shift mechanism => Page 74

III - Dismantling and assembling input shaft, output shaft, differential and selector forks => Page 76

Protected by copyright. Copying for private or commercial purposes, in part or in whole, is not permitted unless authorised by Volkswagen AG. Volkswagen AG does not guarantee or accept any liability with respect to the correctness of information in this document. Copyright by Volkswagen AG.
satelettronica

4.4 - Removing and installing cover for gearbox housing and 5th gear

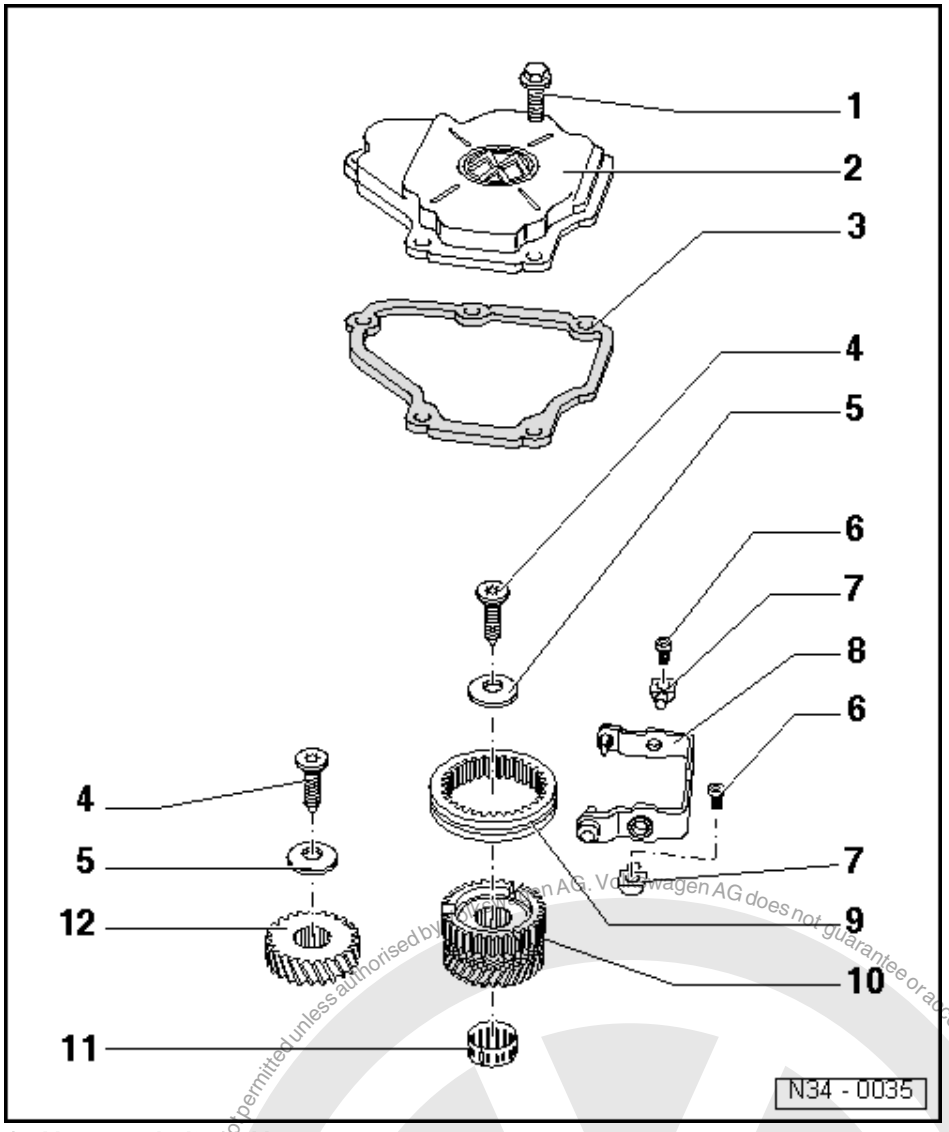

1 Hexagon bolt, 10 Nm
- For gearbox housing cover

2 Gearbox housing cover

Note:

If the gearbox cover is fitted with the gearbox installed, check oil level as follows:

- Fill with oil up to lower edge of filler hole and fit filler plug.
- Start engine, engage gear and allow gearbox to turn for approx. 2 minutes.
- Switch off engine and top up gearbox oil to lower edge of filler hole again.

Protected by copyright. Copying for private or commercial purposes, in part or in whole, is not permitted unless authorised by Volkswagen AG. Volkswagen AG does not guarantee or accept any liability with respect to the correctness of information in this document. Copyright by Volkswagen AG.
satelettronica

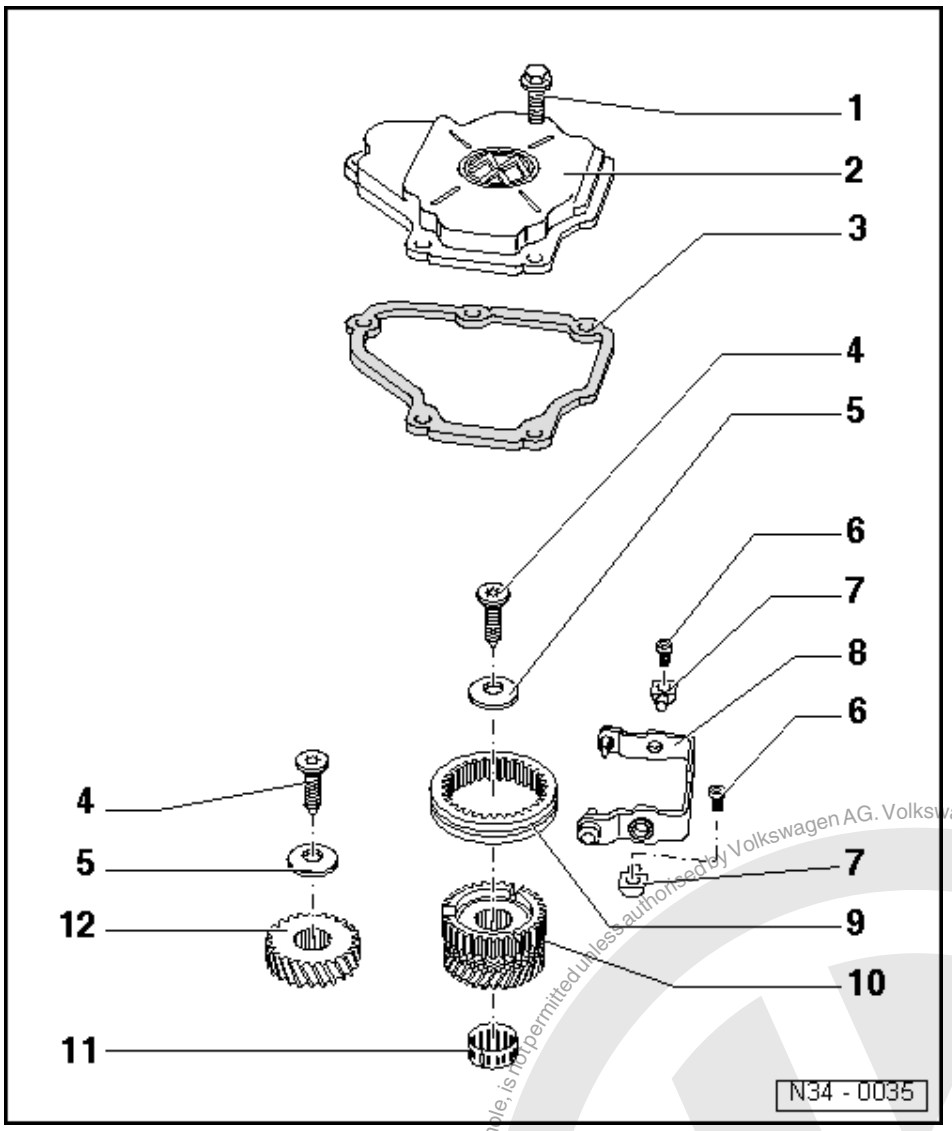

3 Gasket
4 Torx socket head bolt M10, 80 Nm
- Fitted piece on bolt head holds saucer spring washer in position

5 Dished spring
- Installing => Page 95

6 Socket head bolt, 25 Nm
- For pivot pin to gearbox housing

7 Pivot pin
8 5th gear selector fork
- Dismantling and assembling => Page 113
- Adjusting =>Page 96

Protected by copyright. Copying for private or commercial purposes, in part or in whole, is not permitted unless authorised by Volkswagen AG. Volkswagen AG does not guarantee or accept any liability with respect to the correctness of information in this document. Copyright by Volkswagen AG.
satelettronica

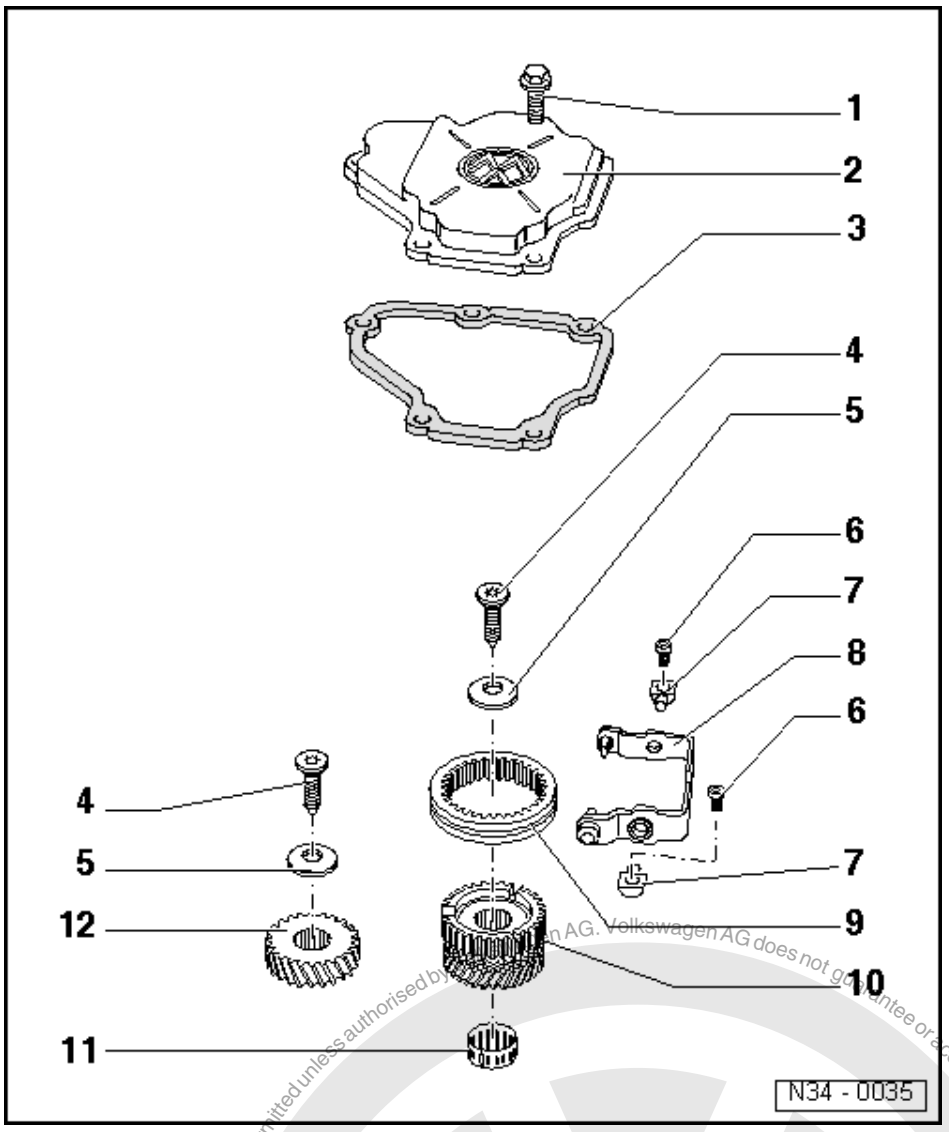

9 5th gear locking collar
- Installation position =>Page 93
- Adjusting =>Page 96

10 Synchro-hub with 5th gear and synchronizing ring
- Dismantling and assembling => Page 132

11 Needle roller bearing

12 5th speed gear wheel
- Installation position => page 92

Protected by copyright. Copying for private or commercial purposes, in part or in whole, is not permitted unless authorised by Volkswagen AG. Volkswagen AG does not guarantee or accept any liability with respect to the correctness of information in this document. Copyright by Volkswagen AG.
satelettronica

4.5 - Removing and installing gearbox housing and selector mechanism

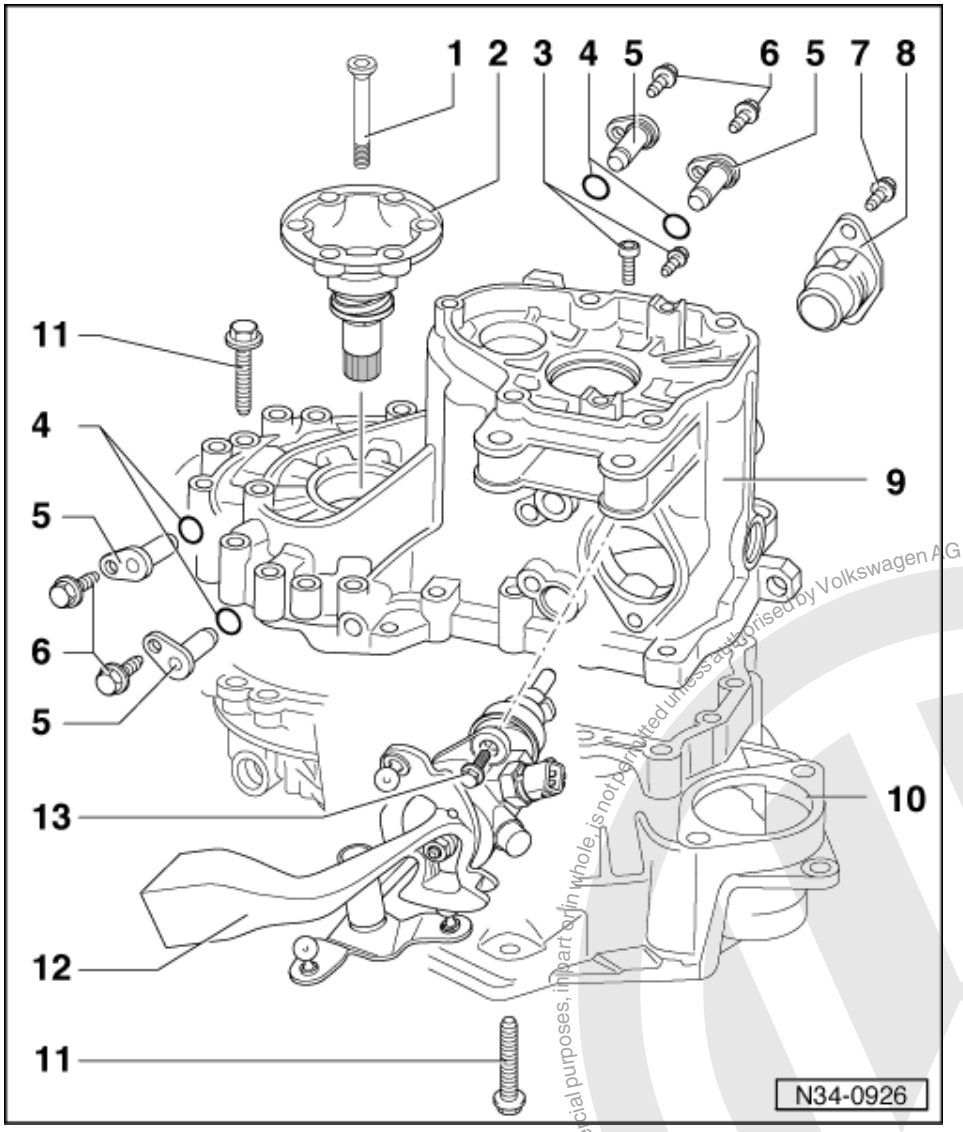

1 Countersunk head bolt, 25 Nm
2 Flanged shaft with spring
- Removing and installing => Page 176
- Assembling=> from page 182

3 Torx socket head bolt, 30 Nm
- For reverse shaft support
- Self-locking
- Always renew

4 O ring
- Always renew

5 Pivot pin
6 Bolt, 25 Nm

Protected by copyright. Copying for private or commercial purposes, in part or in whole, is not permitted unless authorised by Volkswagen AG. Volkswagen AG does not guarantee or accept any liability with respect to the correctness of information in this document. Copyright by Volkswagen AG.
satelitronica

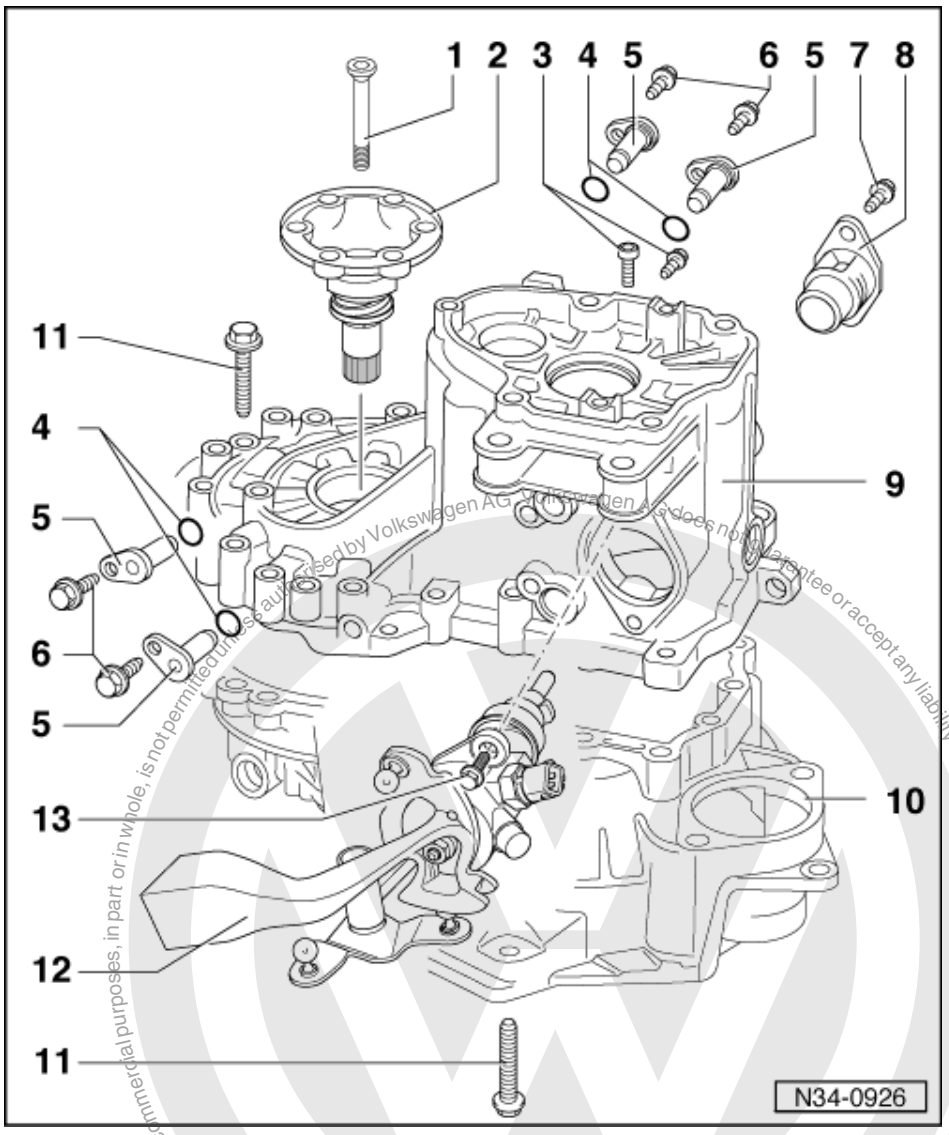

7 Bolt, 25 Nm
8 Cover plate
9 Gearbox housing
- Servicing => page 97

10 Clutch housing
- Servicing => page 97

11 Hexagon bolt, 25 Nm then turn 90°further
12 Selector mechanism
- Dismantling and assembling =>from Page 107

13 Hexagon bolt, 25 Nm

Protected by copyright. Copyright by Volkswagen AG. Copyright by Volkswagen AG, Wolfsburg. It is not to be republished in any form, in whole or in part, or used for commercial purposes, in part or in whole, is not permitted unless authorised by Volkswagen AG. Volkswagen AG does not guarantee or accept any liability with respect to the correctness of information in this document.
satelettronica

4.6 - Removing and installing input shaft, output shaft (pinion shaft), differential and selector forks

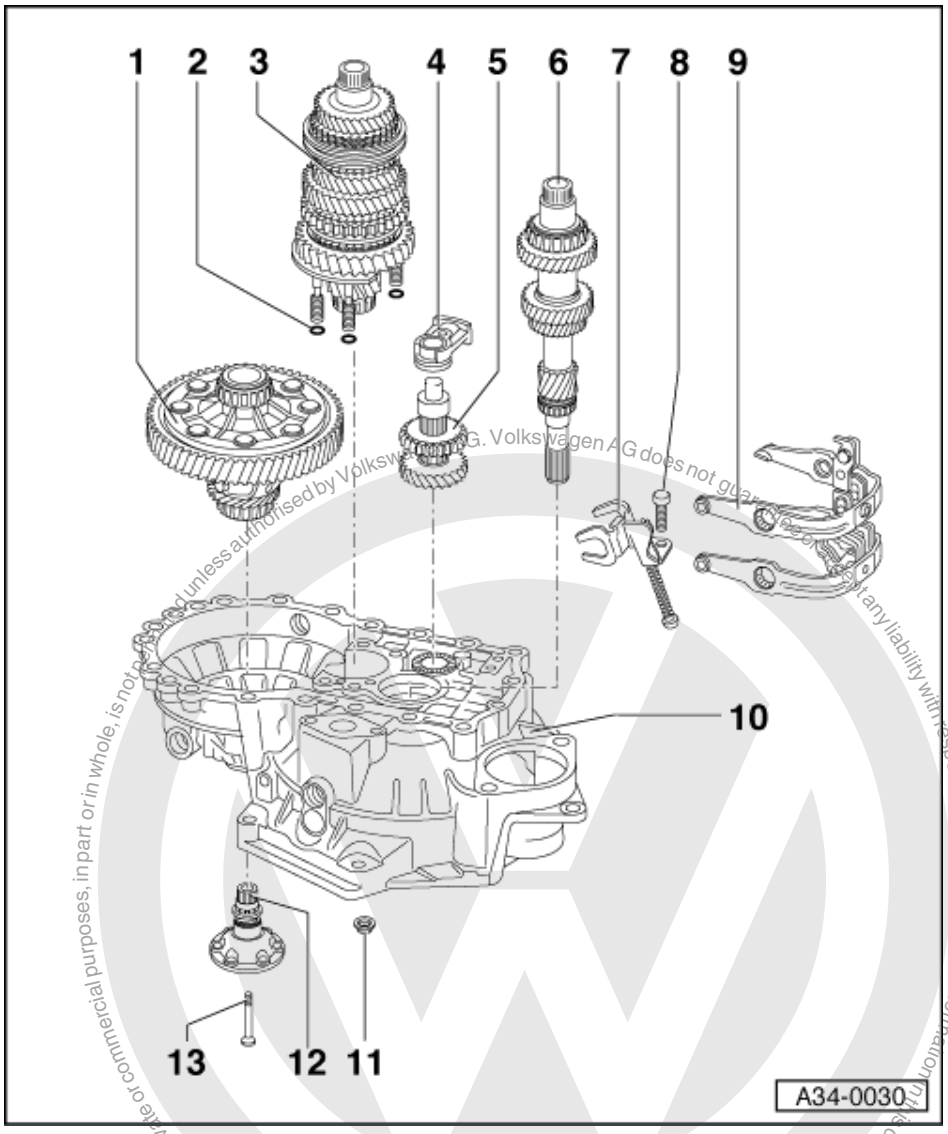

1 Differential
- Dismantling and assembling => page 182

2 Oil seal
- Qty. 4
- Always renew

3 Output shaft
- Dismantling and assembling => Page 138

4 Reverse shaft support
- Dismantling and assembling => Page 173

Protected by copyright. Copyright by Volkswagen AG.
satelettronica

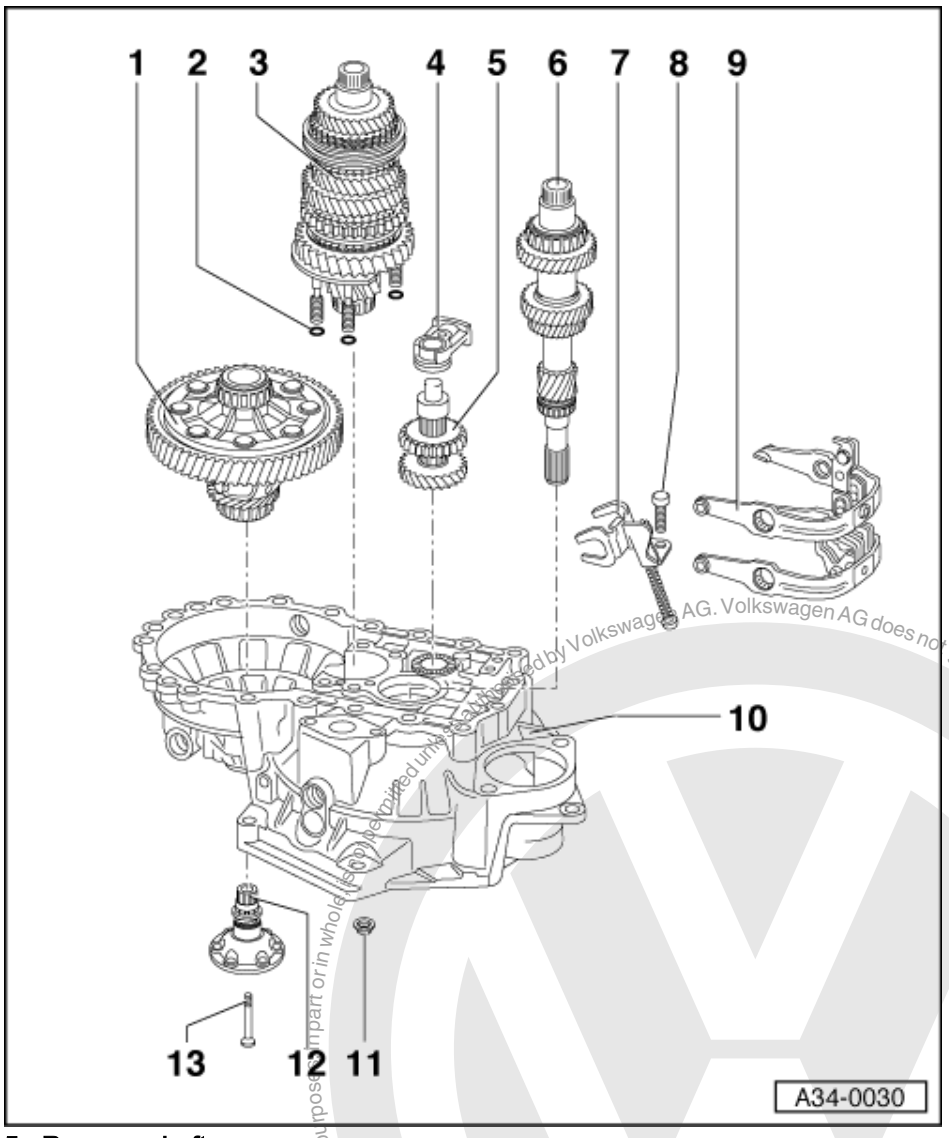

5 Reverse shaft
- Dismantling and assembling => Page 171

6 Input shaft
- Dismantling and assembling => page 120

7 Reverse gear selector fork
- Dismantling and assembling => Page 113
- Installation position => Page 88

8 Torx socket head bolt, 25 Nm

9 Selector mechanism
- (Selector forks)
- Dismantling and assembling => Page 113

10 Clutch housing
- Servicing => Page 97

Protected by copyright. Copyright by Volkswagen AG. Volkswagen AG does not guarantee or accept any liability with respect to the correctness of information in this document. Copyright by Volkswagen AG.
satelettronica

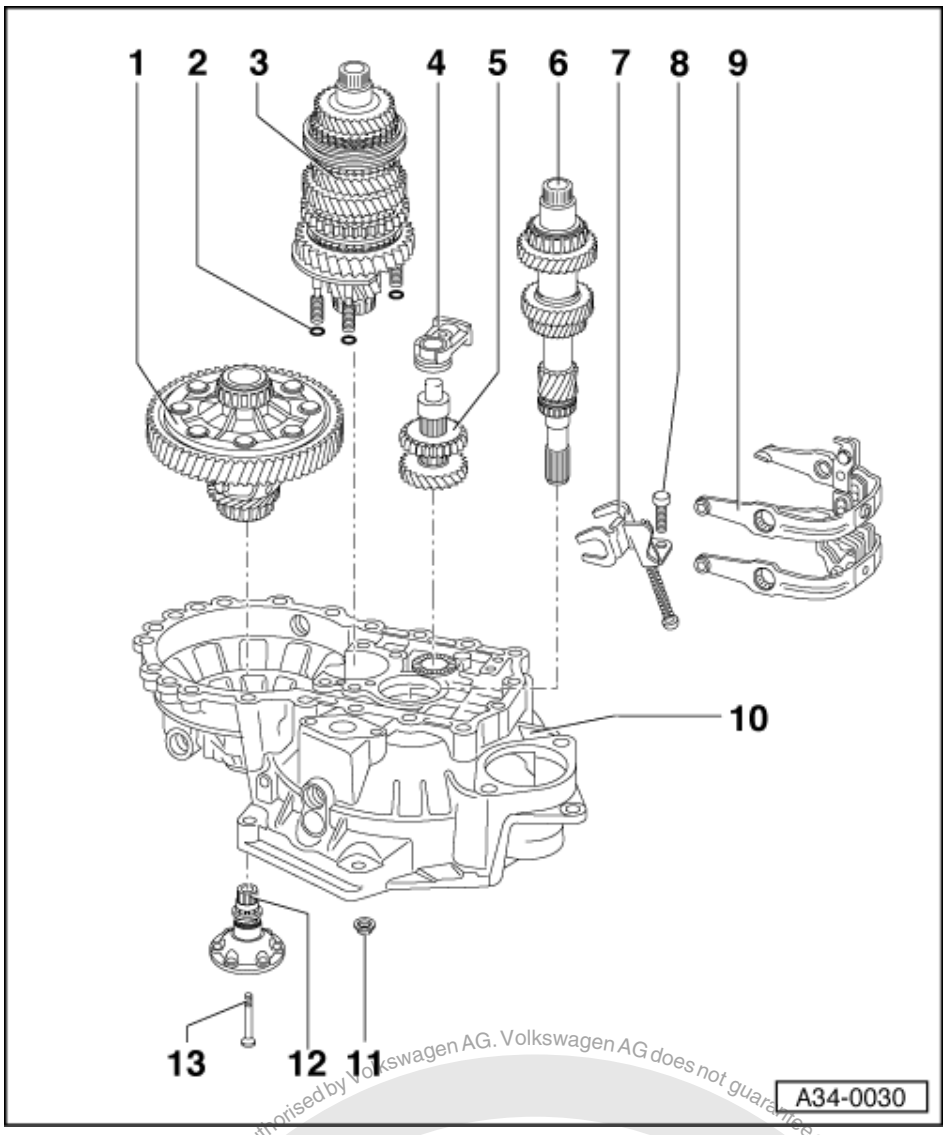

11 Hexagon nut, 25 Nm and then turn 90° further

- 4 nuts for bearing support

12 Flange shaft with spring

- Removing and installing => Page 176
- Assembling=> from page 182

13 Cone head bolt, 25 Nm

Protected by copyright. Copying for private or commercial purposes, in part or in whole, is not permitted unless authorised by Volkswagen AG. Volkswagen AG does not guarantee or accept any liability with respect to the correctness of information in this document. Copyright by Volkswagen AG.
satelettronica

4.7 - Assembly sequence

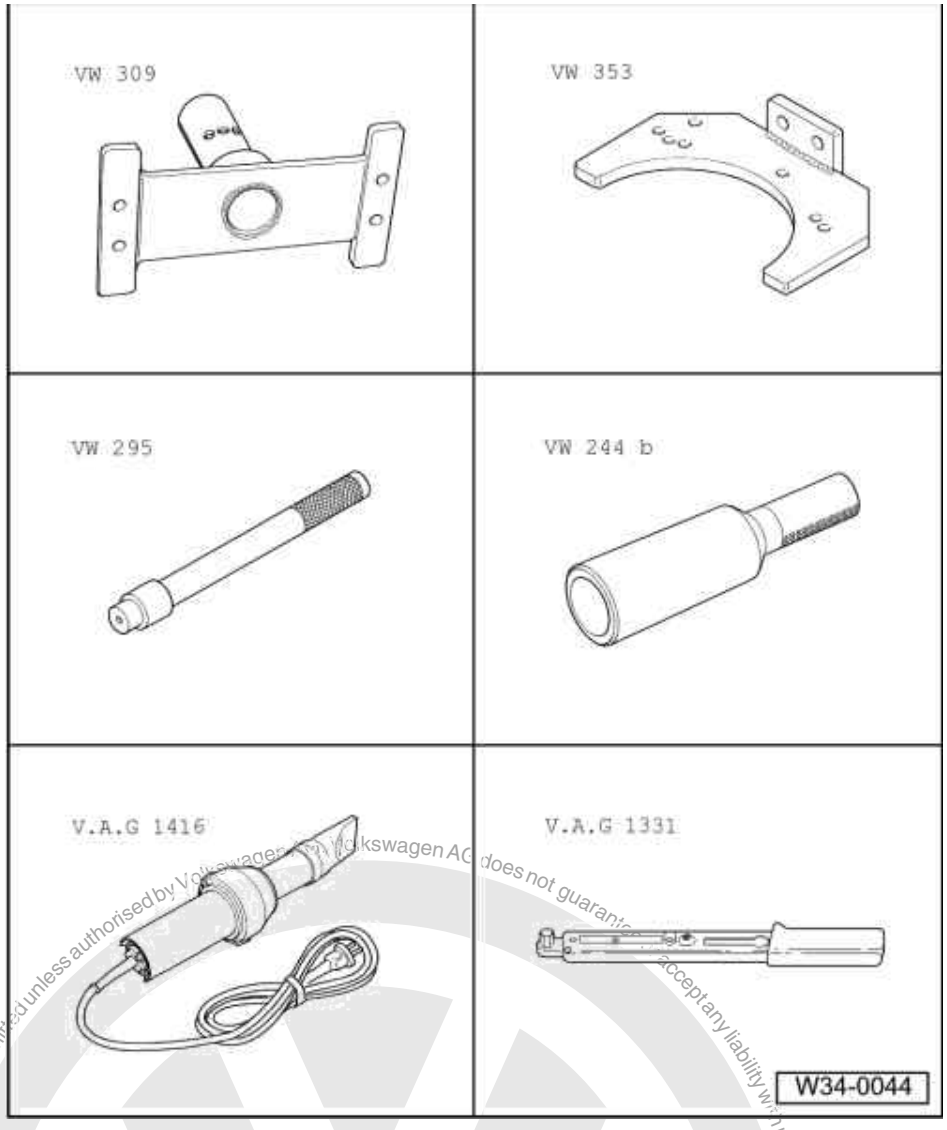

Dismantling and assembling gearbox housing cover, gearbox housing, selector mechanism, input shaft, output shaft (pinion shaft), differential and selector forks

Special tools and workshop equipment required

- VW 309 Holding plate
- VW 353 Gearbox support
- VW 295 Drift
- VW 244 B Fitting sleeve
- V. A. G. 1416 Hot air blower
- V.A.G 1331 Torque wrench
- Studs M 8 x 100 mm

satelettronica
Protected by copyright. Copying for private or commercial purposes, in part or in whole, is not permitted unless authorised by Volkswagen AG. Volkswagen AG does not guarantee or accept any liability with respect to the correctness of information in this document. Copyright by Volkswagen AG.

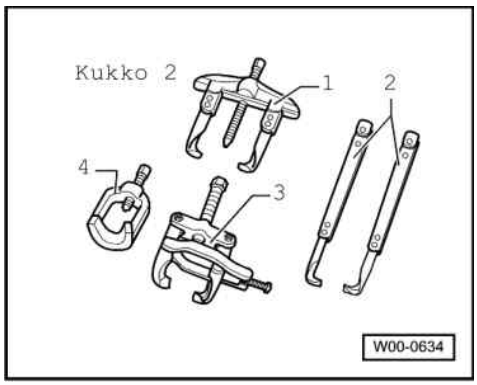

Special tools and workshop equipment required

- 1 - Two-arm puller Kukko 20/10

with Matra V170 hooks

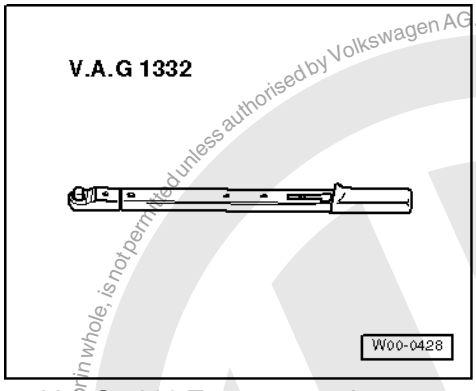

- V.A.G 1332 Torque wrench

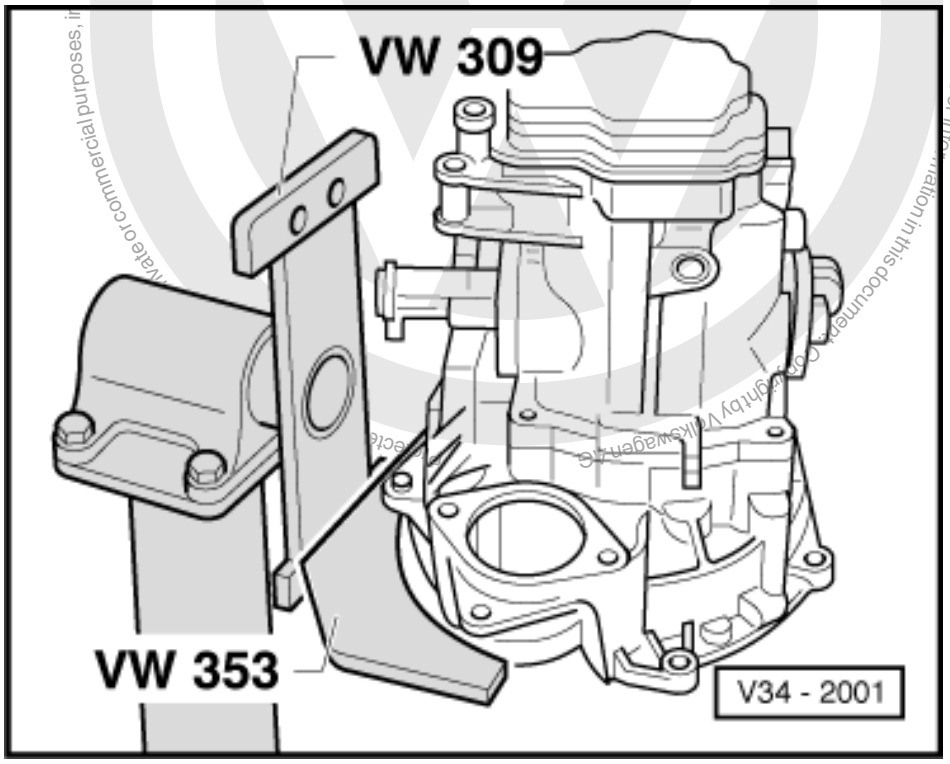

Volkswagen AG. Volkswagen AG does not guarantee or accept any liability with respect to the correctness of information in this document. Copyright by Volkswagen AG.
...vate or commercial purposes, in part or in whole, is not permitted unless authorised by Volkswagen AG.
satelettronica

Copyright by Volkswagen AG. Volkswagen AG does not guarantee or accept any liability with respect to the correctness of information in this document. Copying for private or commercial purposes, in part or in whole, is not permitted unless authorised by Volkswagen AG.

Dismantling

- -> Mount gearbox on repair stand.
- Drain gearbox oil.

- Remove clutch release lever and release bearing => Page 26 .

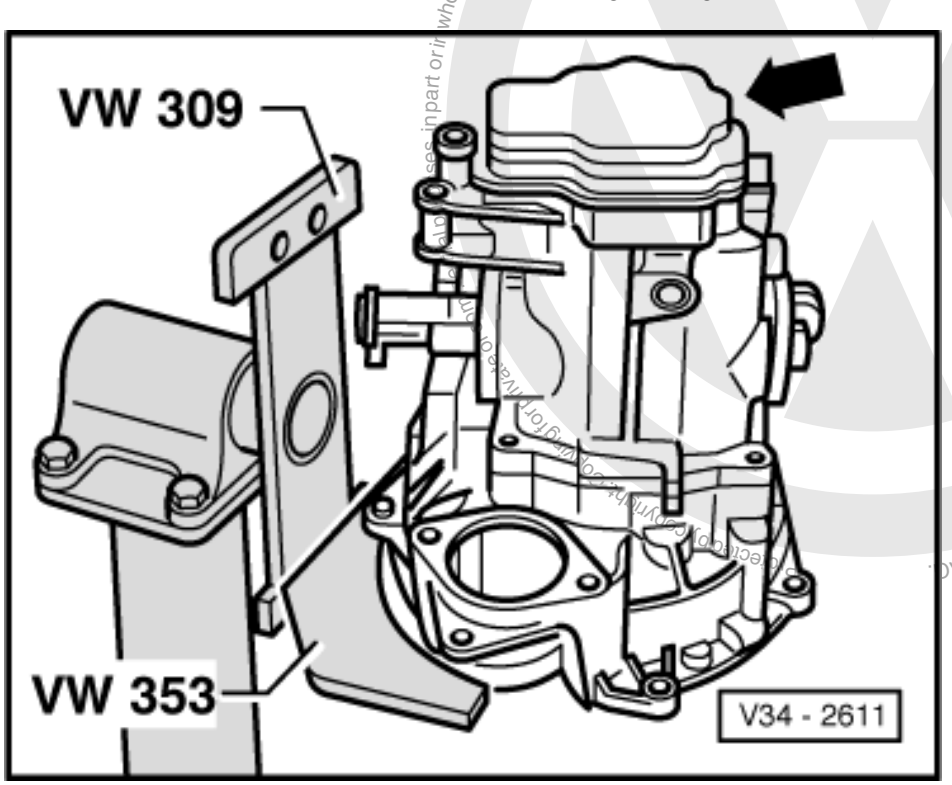

- Remove guide sleeve => Page 26 .
- -> Remove gearbox housing cover (arrow).

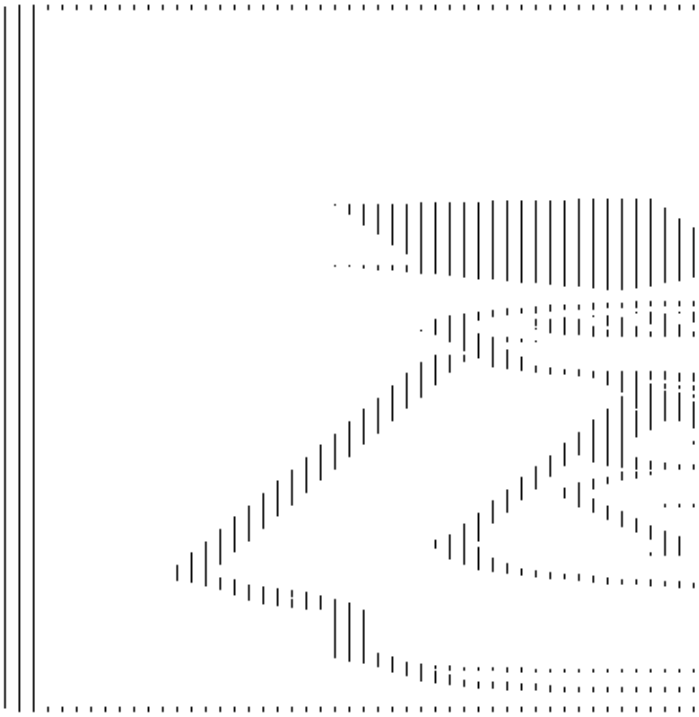

satelettronica

- -> Remove 5th gear selector fork (arrow)

Note:

Before lifting the locking collar, take off spring and lock body. Then afterwards replace locking collar on syncro-hub again, but without selector fork.

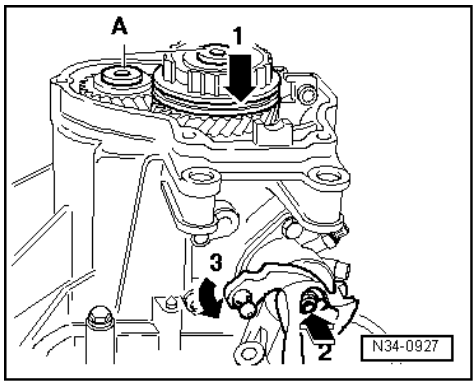

- -> Remove bolts -A- for synchro-hub and 5th gear, to do this select 5th (arrow 1) and 1st gear (arrows 2 and 3).
- After engaging both gears the input shaft and output shaft are locked, synchro-hub and gear wheel cannot turn. Both bolts can now be loosened.

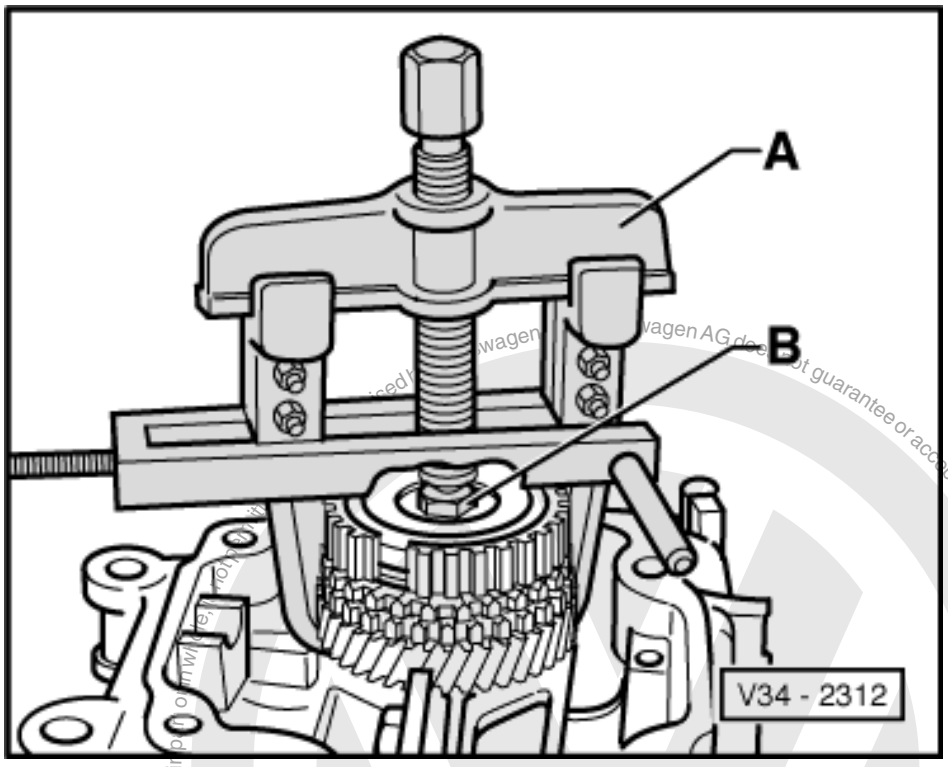

- -> Pull off synchro-hub and 5th gear wheel and remove together with needle roller bearing.

  A - Two arm puller e.g. Kukko 20/10 with Matra V/170 hooks.
  B - Hexagon bolt M10 x 20

satelettronica
Protected by copyright. Copying for private or commercial purposes, in part or in whole, is not permitted unless authorised by Volkswagen AG. Volkswagen AG does not guarantee or accept any liability with respect to the correctness of information in this document. Copyright by Volkswagen AG.

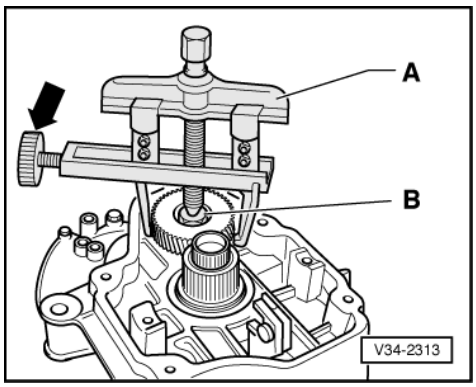

- -> Pull off 5th gear

A - Two arm puller e.g. Kukko 20/10 with Matra V/170 hooks.
B - Hexagon bolt M10 x 20
Removal sequence:
- Assemble two arm puller and centralize by turning screw (arrow).
- Pull gear wheel off with two arm puller, first heat with hot air blower V.A.G 1416 if necessary.

Note:

When pulling off the gear wheel ensure that the hooks do not bend outwards, if necessary tighten screw (arrow). After 5th gear wheel has been removed check for damage.

- -> Remove both flange shafts.
- Take out flanged shafts along with springs, thrust washers and tapered rings.

satelettronica
Protected by copyright. Copying for private or commercial purposes, in part or in whole, is not permitted unless authorised by Volkswagen AG. Volkswagen AG does not guarantee or accept any liability with respect to the correctness of information in this document. Copyright by Volkswagen AG.

Protected by copyright. Copying for private or commercial purposes, in part or in whole, is not permitted unless authorised by Volkswagen AG. Volkswagen AG does not guarantee or accept any liability with respect to the correctness of information in this document. Copyright by Volkswagen AG.

- -> Remove both reverse shaft support bracket bolts (arrows).

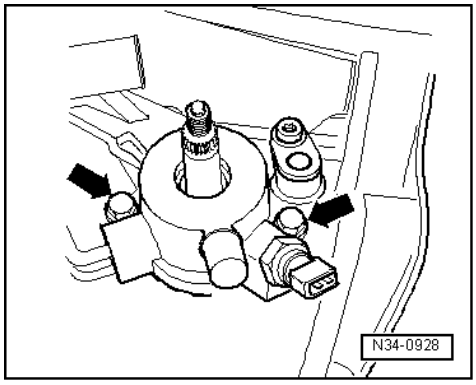

- -> Remove selector shaft with selector mechanism cover, to do this place selector shaft in neutral position. Then remove bolts -arrows- and pull selector shaft out of the gearbox housing.

satelettronica

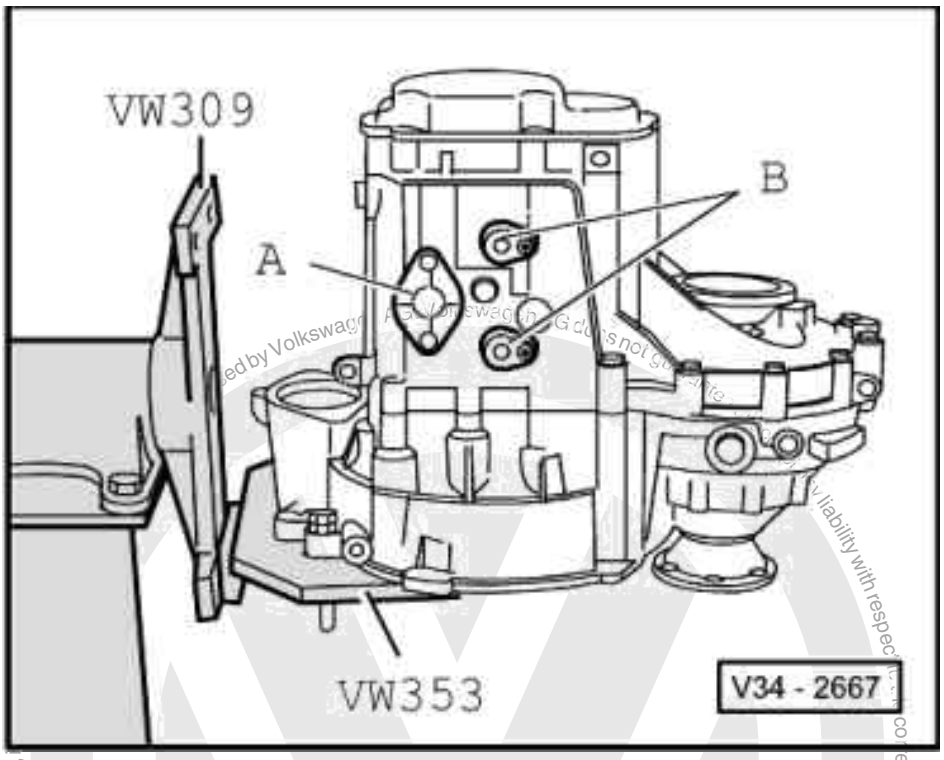

- -> Remove cover plate -A- and pivot pins -B- from underside of gearbox.

- -> Remove pivot pins -A- on top side of gearbox and gearbox housing to clutch housing securing bolts -B- in area of differential.

satelettronica

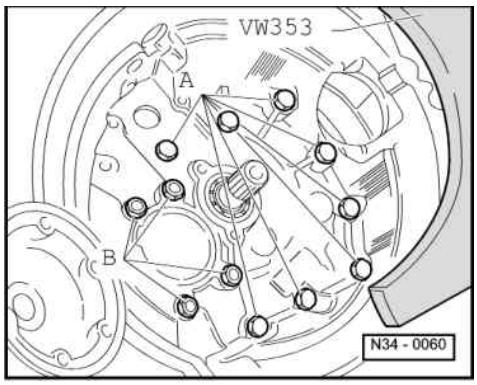

- -> Remove bolts -A-, from inside clutch housing for securing clutch housing to gearbox housing.

Note:

Do not remove nuts -B- for output shaft bearing support.

- -> Take-off gearbox housing, if necessary carefully lever up all round and alternating between sides on the protruding housing flange (arrows), being careful not to damage sealing surfaces.

Protected by copyright. Copying for private or commercial purposes, in part or in whole, is not permitted unless authorised by Volkswagen AG. Volkswagen AG does not guarantee or accept any liability with respect to the correctness of information in this document. Copyright by Volkswagen AG.

satelettronica

Protected by copyright. Copying for private or commercial purposes, in part or in whole, is not permitted unless authorised by Volkswagen AG. Volkswagen AG does not guarantee or accept any liability with respect to the correctness of information in this document. Copyright by Volkswagen AG.

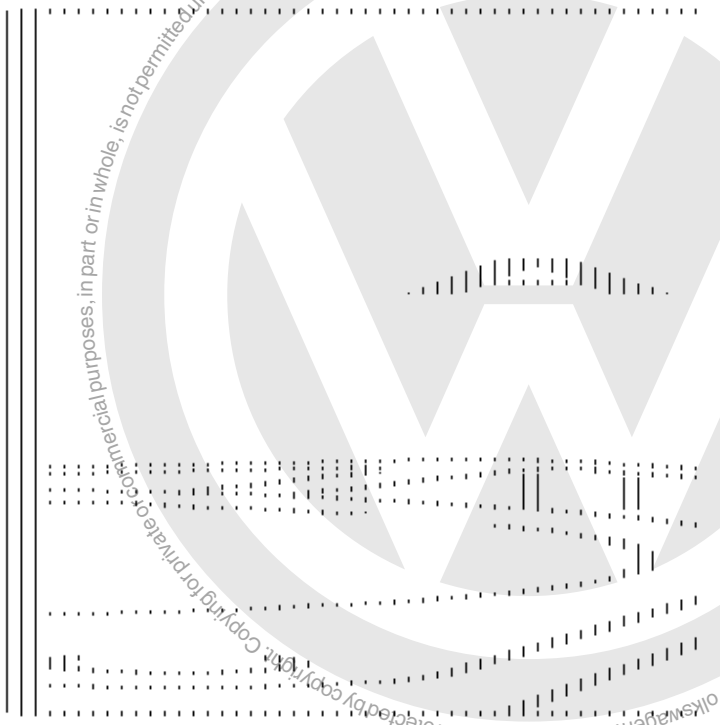

- -> Remove selector forks -A- together with selector plates.
- Unscrew bolt for selector mechanism for reverse gear -B-.

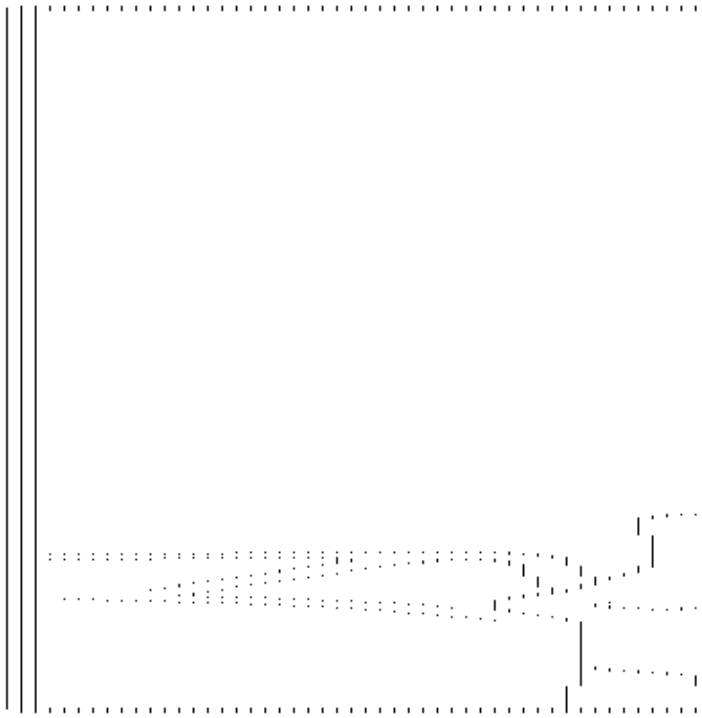

- Remove nuts for output shaft bearing support (=>Item -B-, Illustration N34-0060, Page 86)
- -> Remove reverse gear -A-, input shaft -B- and output shaft -C- one after the other from clutch housing.
- Take out differential.

satelettronica

Assembling

- Install differential.

- -> Always renew sealing rings (arrows) for output shaft bearing support.

Note:

The illustration only shows 3 of the 4 sealing rings.

- Install input shaft, output shaft and reverse shaft together.
- Tighten nuts for output shaft bearing support.
- Clean locking fluid remnants from threads in the reverse shaft support (arrow Illustration V34-2293, Page 90). The remnants can be removed using a tap.

Protected by copyright. Copyright for private or commercial purposes, in part or in whole, is not permitted unless authorised by Volkswagen AG. Volkswagen AG does not guarantee or accept any liability with respect to the correctness of information in this document. Copyright by Volkswagen AG.

satelettronica

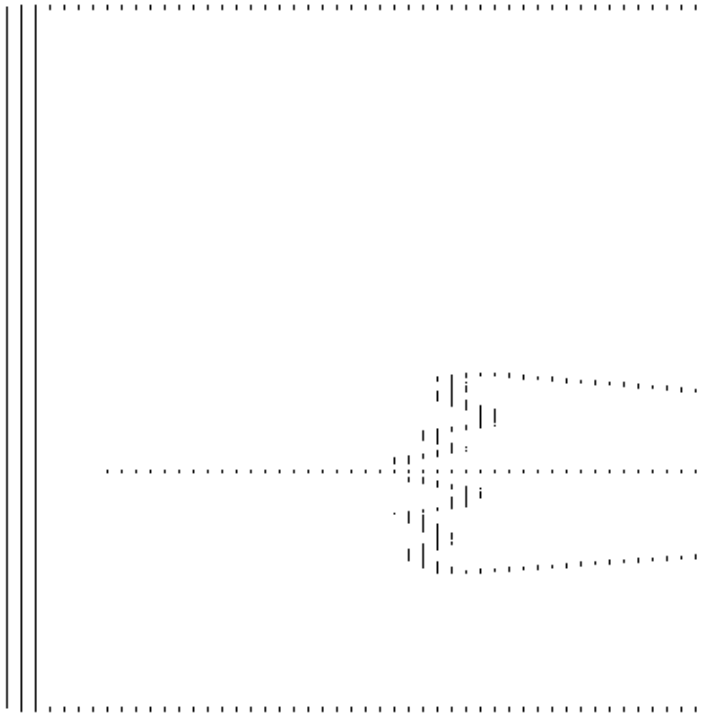

- Install reverse shaft support.
- Install reverse gear selector mechanism.

-> Installation position reverse gear

- Install selector forks together with selector plates.

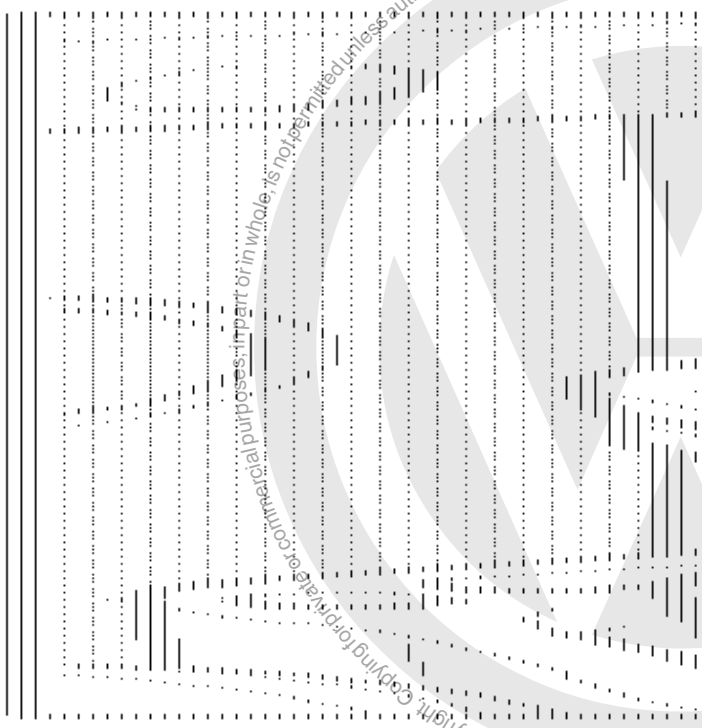

- -> Screw M 8 x 100 mm studs -A- into reverse shaft support so that the shaft is aligned after fitting gearbox housing.

satelettronica
Protected by copyright. Copying for private or commercial purposes, in part or in whole, is not permitted unless authorised by Volkswagen AG. Volkswagen AG does not guarantee or accept any liability with respect to the correctness of information in this document. Copyright by Volkswagen AG.

- Align selector plates.

Note:

The selector segments must be positioned in the grooves on the locking collars.

- Fit gearbox housing.

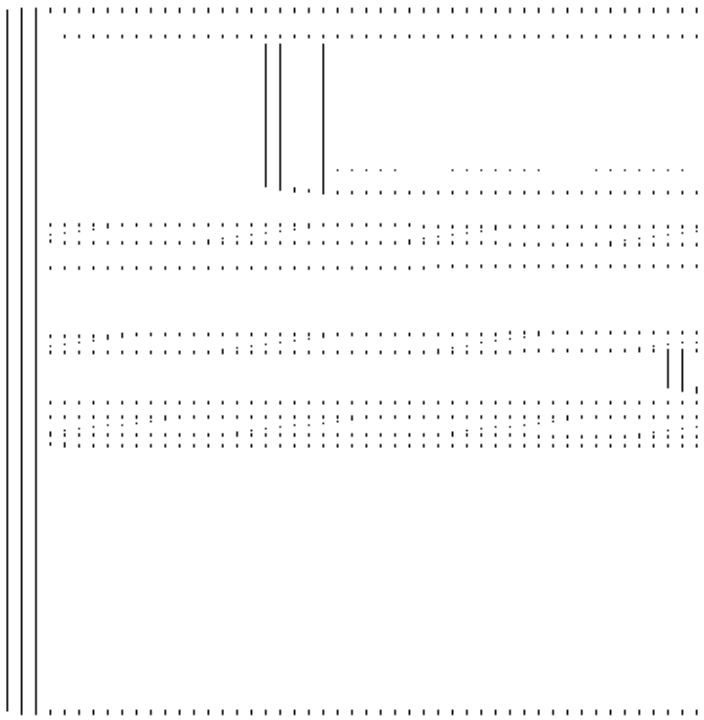

Install reverse shaft support bolts (arrow) as follows:

- -> Insert bolt -a-, remove stud (=> Illustration V34-2008), insert bolt -b- and hand tighten.

  Tightening sequence:
  1 - Bolt -a- 30 Nm
  2 - Bolt -b- 30 Nm

Protected by copyright. Copying for private or commercial purposes, in part or in whole, is not permitted unless authorised by Volkswagen AG. Volkswagen AG does not guarantee or accept any liability with respect to the correctness of information in this document. Copyright by Volkswagen AG.

satelettronica

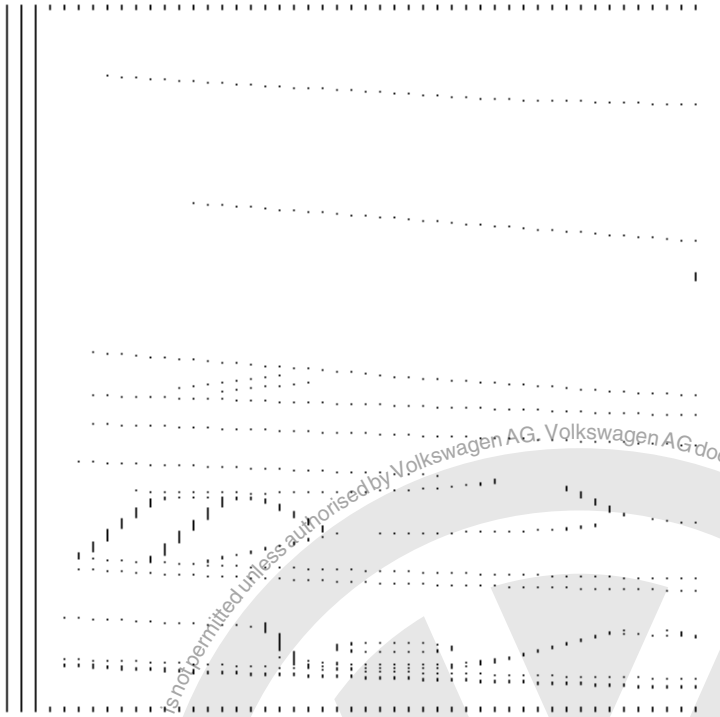

- -> Install pivot pin (arrow) for selector forks. To do this align selector mechanism with a screwdriver, so that the relevant pivot pin can be installed.
- Fit selector shaft cover

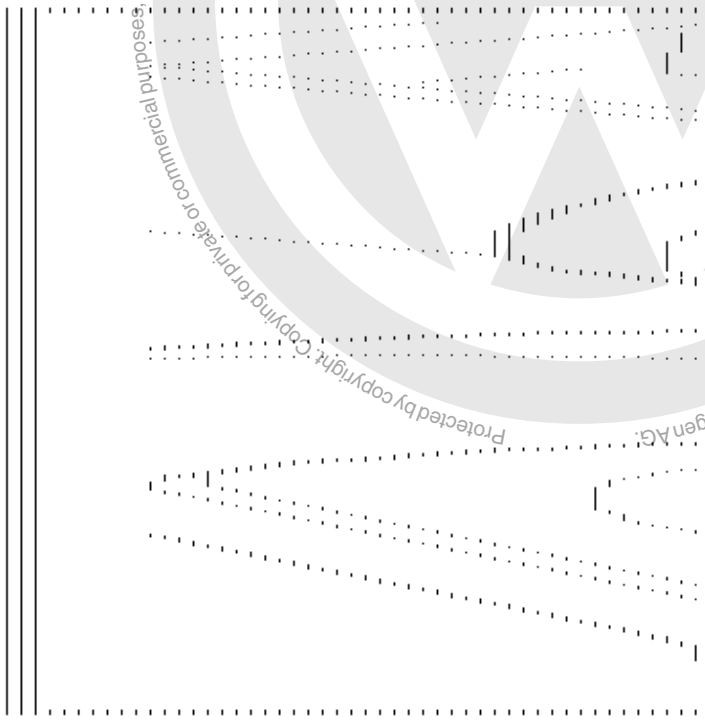

-> Install selector shaft as follows:

- Place selector plates in neutral.
- Locate lug (arrow 1) in the recess in gearbox housing. Position selector shaft so that selector finger (arrow 2) is inserted in the selector plates.

Protected by copyright. Copying for private or commercial purposes, in part or whole, is not permitted unless authorised by Volkswagen AG. Volkswagen AG does not guarantee or accept any liability with respect to the correctness of information in this document. Copyright by Volkswagen AG.
satelettronica

- Install selector shaft cover.

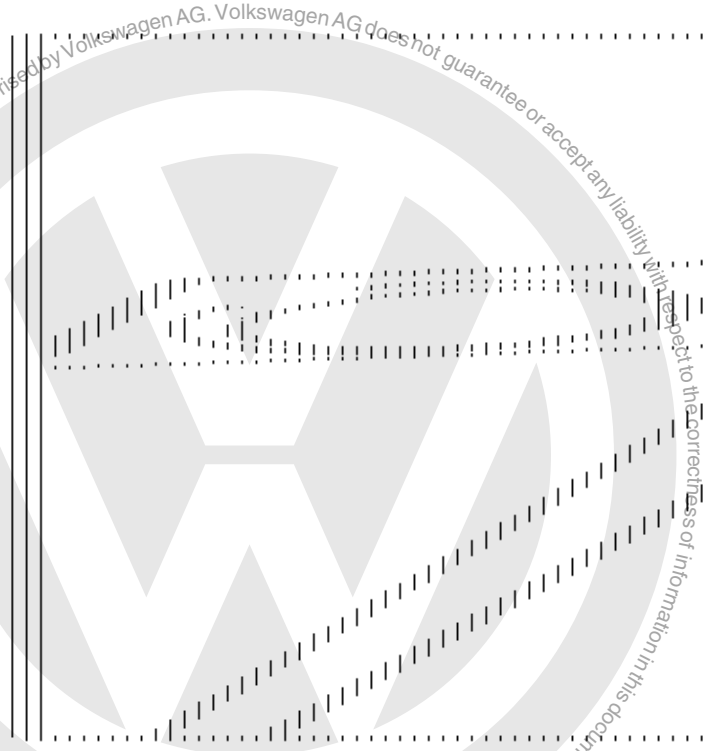

Protected by copyright. Copying for private or commercial purposes, in part or in whole, is not permitted unless authorised by Volkswagen AG. Volkswagen AG does not guarantee or accept any liability with respect to the correctness of information in this document. Copyright by Volkswagen AG.

-> Installation position 5th gear wheel

The circumferential groove (arrow) faces to gearbox housing.

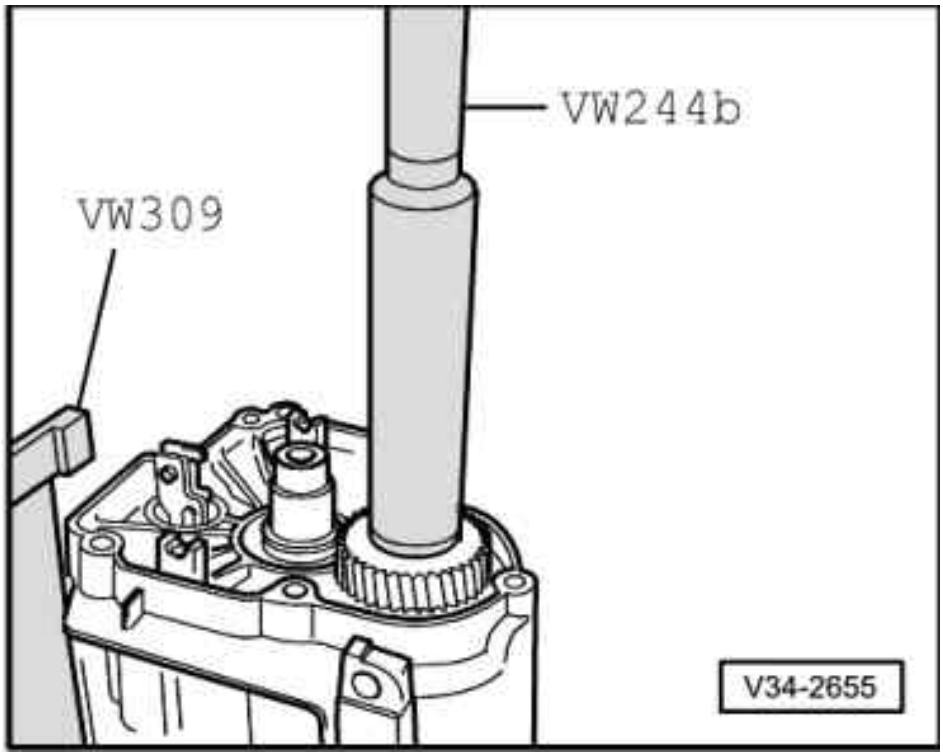

- -> Knock-on 5th gear.

satelettronica

Checking 5th gear synchro-ring

- -> Before installing 5th gear wheel and synchro-ring press the synchro-ring onto the cone of the gear wheel and measure gap -a- with a feeler gauge.

Gap -a-	New	Wear limit
5th gear	1.1 ... 1.7 mm	0.5 mm

- Install 5th gear wheel with needle roller bearing
- Place 5th gear synchro-ring on gear wheel
- Assembly 5th gear synchro-hub/locking collar before installing => Page 133 .

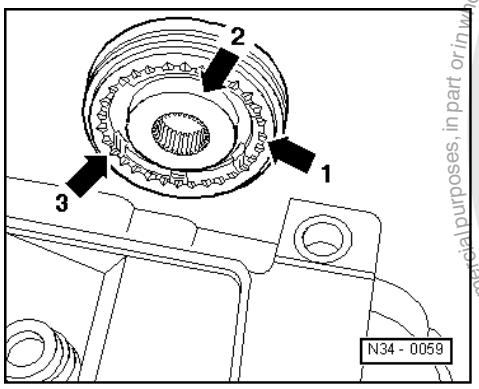

-> Installation position 5th gear synchro-hub/locking collar

The pointed teeth of the locking collar (arrow 1) and the high shoulder of the synchro-hub (arrow 2) face the gearbox housing.

Protected by copyright. Copyright by Volkswagen AG. Volkswagen AG does not guarantee or accept any liability with respect to the correctness of information in this document. Copyright by Volkswagen AG. Copy for private or commercial purposes, in part or in whole, is not permitted unless authorised by Volkswagen AG.
satelettronica

The syncro-hub mountings (arrow 3) align with the synchro-ring cast locking pieces (=>arrows on Illustration N35-0018, Page 94).

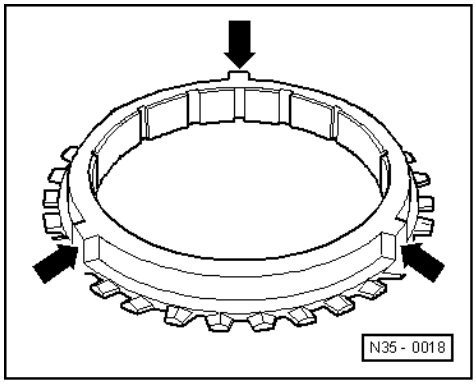

-> 5th gear synchro-ring with cast locking pieces (arrows)

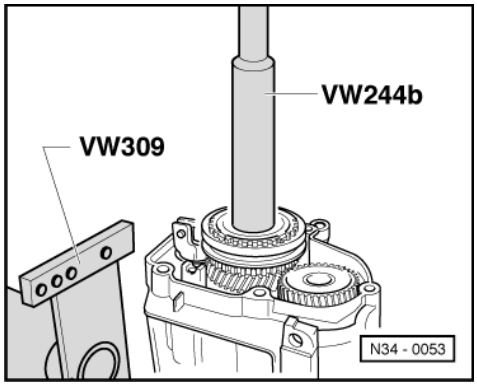

- -> Knock-on 5th gear synchro-hub

Note:

When driving on ensure synchro-ring is free to move.

Protected by copyright. Copying for private or commercial purposes, in part or in whole, is not permitted unless authorised by Volkswagen AG. Volkswagen AG does not guarantee or accept any liability with respect to the correctness of information in this document. Copyright by Volkswagen AG.

satelettronica

- Screw-in securing bolts for synchro-hub and 5th gear wheel.

-> Installation position of dished spring for gear wheel and 5th gear synchro-hub securing bolts:

The outer diameter (concave side -arrows-) faces 5th gear.

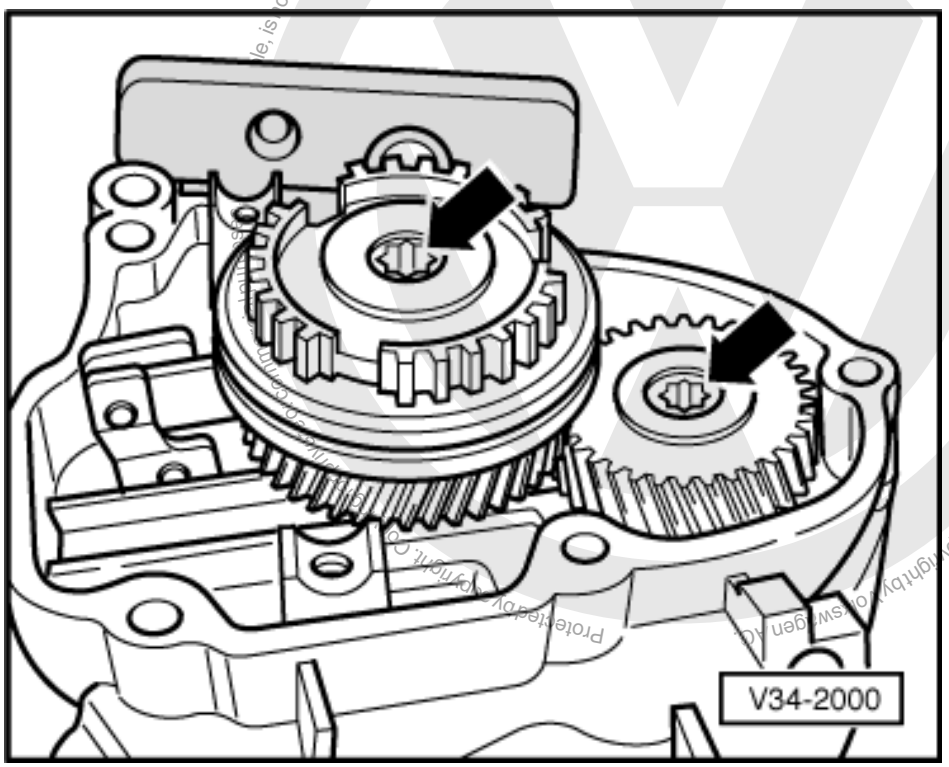

- -> Engage two gears before tightening 5th gear synchro-hub and gear wheel securing bolts (arrows) (=>Illustration N34-0927, Page 82)
- Install 5th gear selector fork.

satelettronica

-> Adjusting 5th gear:

- Engage 5th gear. Loosen bolt -1-. Press locking collar and selector fork jaws in direction of arrow, then tighten bolt -1- to 25 Nm.

• Check measurement :
It must not be possible to slide a 0.2 mm feeler gauge between locking collar and gear wheel. If necessary repeat adjustment.

- Disengage 5th gear. Locking collar must now be in the neutral position. Synchro-ring must move freely.
- Select all gears.
- Fit gearbox housing cover

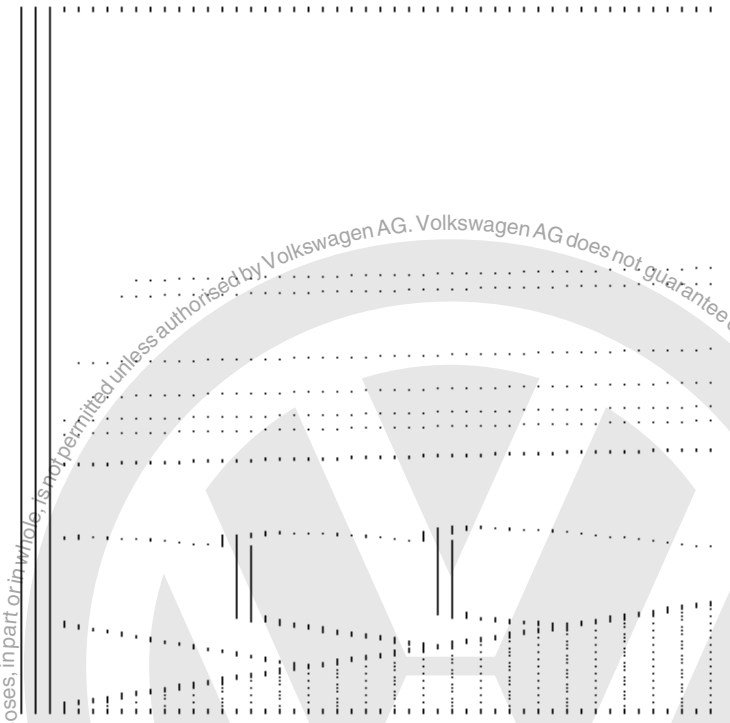

- -> Install flanged shafts along with springs, thrust washers and tapered rings.
- Fit release bearing guide sleeve => Page 26 .
- Fit clutch release lever and release bearing => Page 26 .

Protected by copyright. Copying for private or commercial purposes, in part or in whole, is not permitted unless authorised by Volkswagen AG. Volkswagen AG does not guarantee or accept any liability with respect to the correctness of information in this document. Copyright by Volkswagen AG.

satelettronica

5 - Servicing gearbox housing and clutch housing

5.1 - Servicing gearbox housing and clutch housing

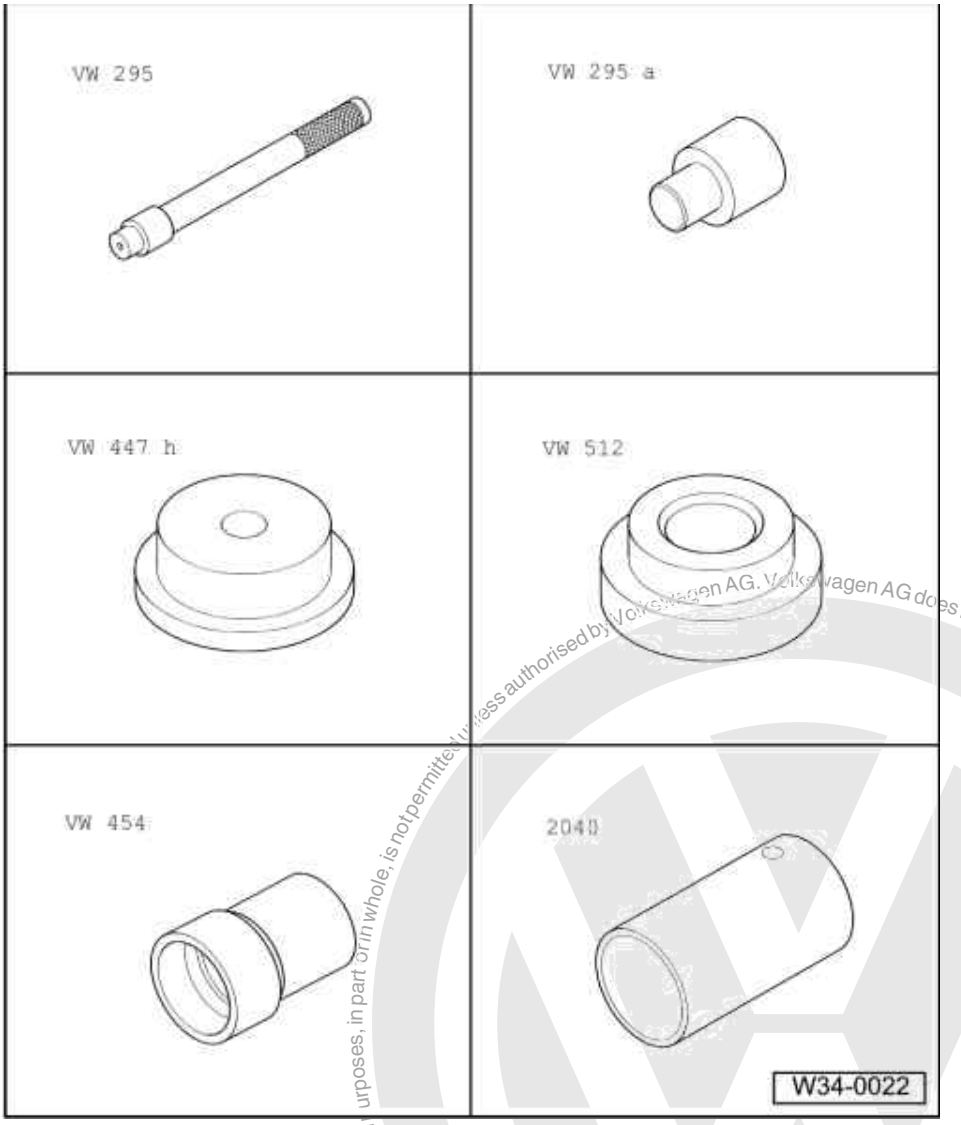

Special tools and workshop equipment required

- VW 295 Drift
- VW 295a Adapter
- VW 447 H Press plate
- VW 512 Press disk
- 2040 Tube
- VW 454 Press piece

Protected by copyright. Copying for private or commercial purposes, in part or in whole, is not permitted unless authorised by Volkswagen AG. Volkswagen AG does not guarantee or accept any liability with respect to the correctness of information in this document. Copyright by Volkswagen AG.
satelettronica

Protected by copyright. Copying for private or commercial purposes, in part or in whole, is not permitted unless authorised by Volkswagen AG. Volkswagen AG does not guarantee or accept any liability with respect to the correctness of information in this document. Copyright by Volkswagen AG.

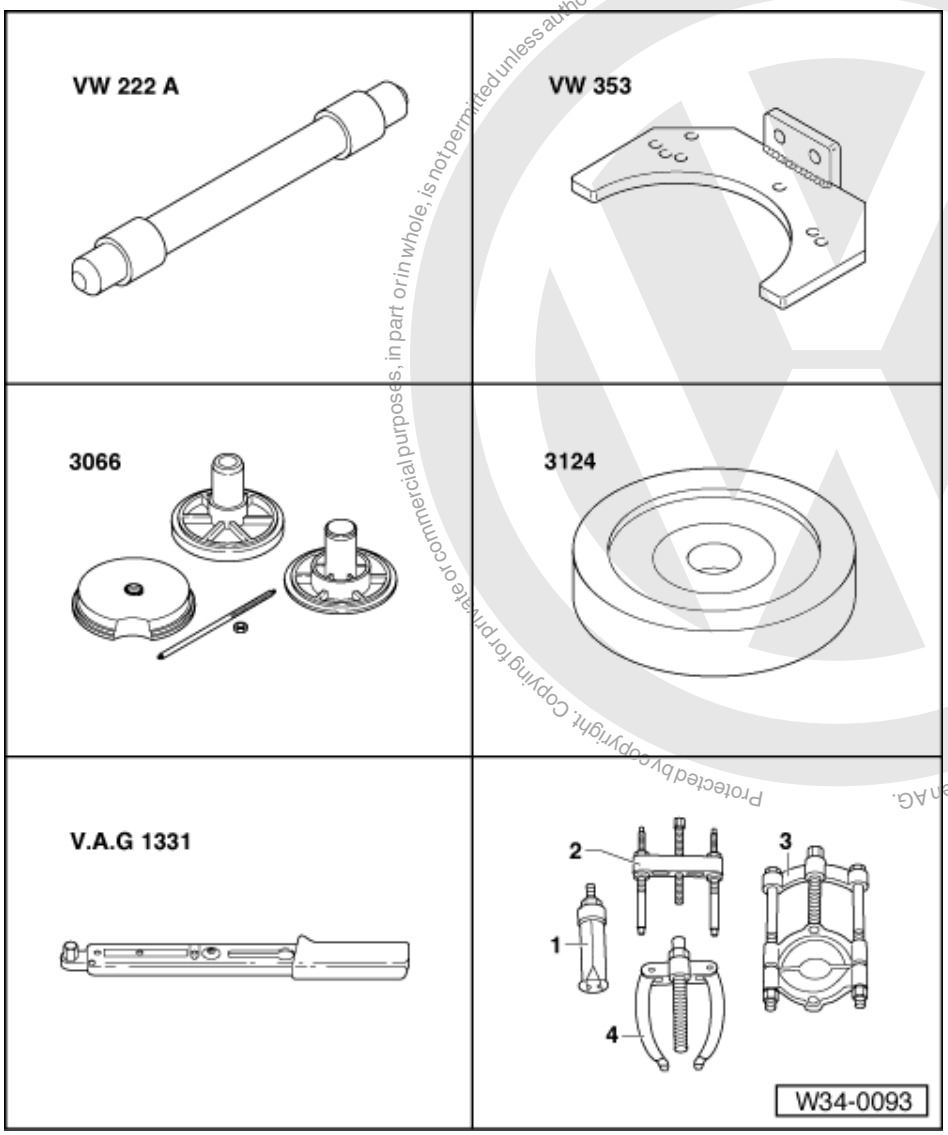

Special tools and workshop equipment required

- VW 222 A Drift
- VW 353 Gearbox support
- 3066 Spindle from assembly tool
- 3124 Press piece
- V.A.G 1331 Torque wrench
- 1 - Kukko 21/1 Internal puller
- 4 - Kukko 22/1 Counter-support

satelettronica

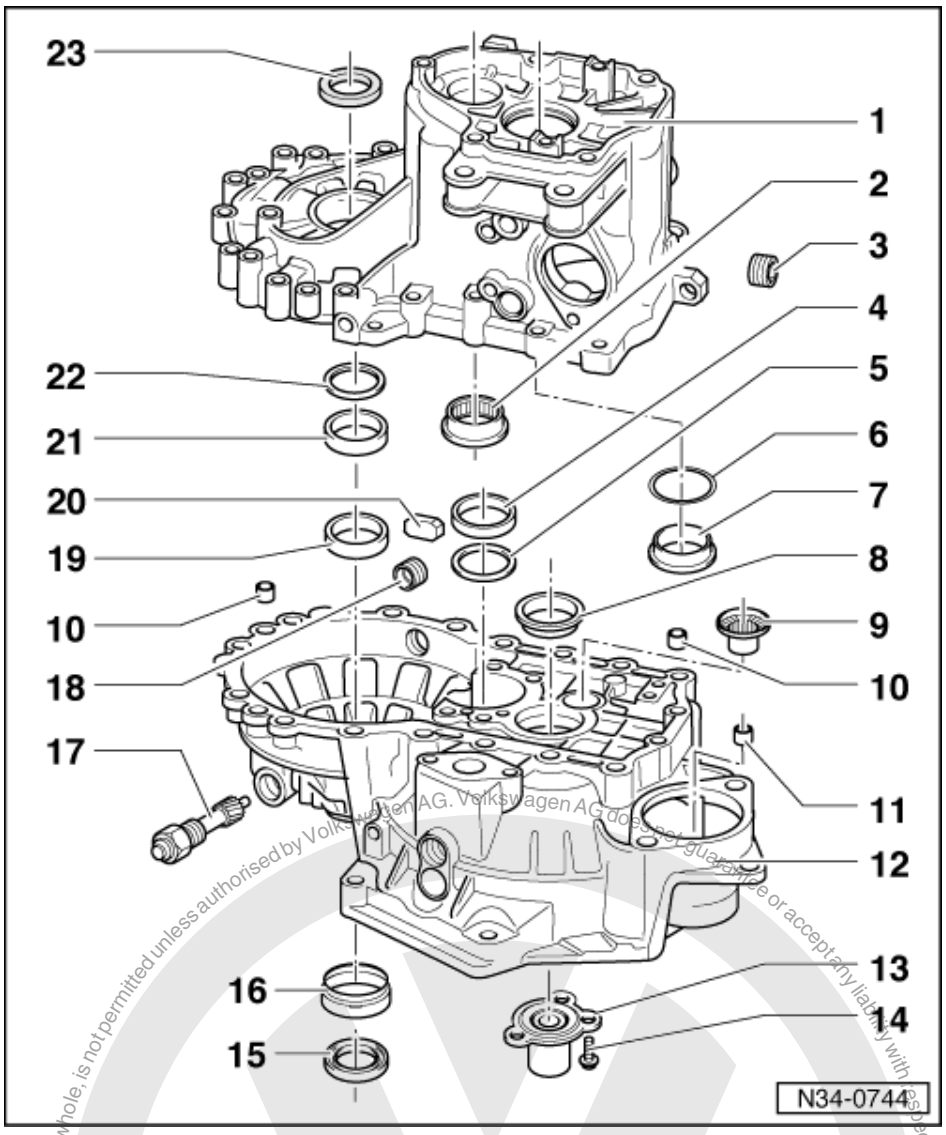

1 Gearbox housing
- If replaced: Adjust input shaft and differential => Page 195

2 Needle roller bearing
- For output shaft
- Removing => Fig. 1
- Installing and securing => Fig. 2

3 Oil filler plug, 25 Nm
- Without magnet

4 Outer race/taper roller bearing
- For output shaft
- Removing and installing => Page 150
- If replaced: Adjust output shaft => Page 168

5 Shim
- For output shaft
- Adjustment overview => Page 195

Protected by copyright. Copyright by Volkswagen AG. Volkswagen AG does not guarantee or accept any liability with respect to the correctness of information in this document. Copyright by Volkswagen AG. Volkswagen AG, Wolfsburg, is not permitted unless authorised by Volkswagen AG. Volkswagen AG does not guarantee or accept any liability with respect to the correctness of information in this document. Copyright by Volkswagen AG.

satelettronica

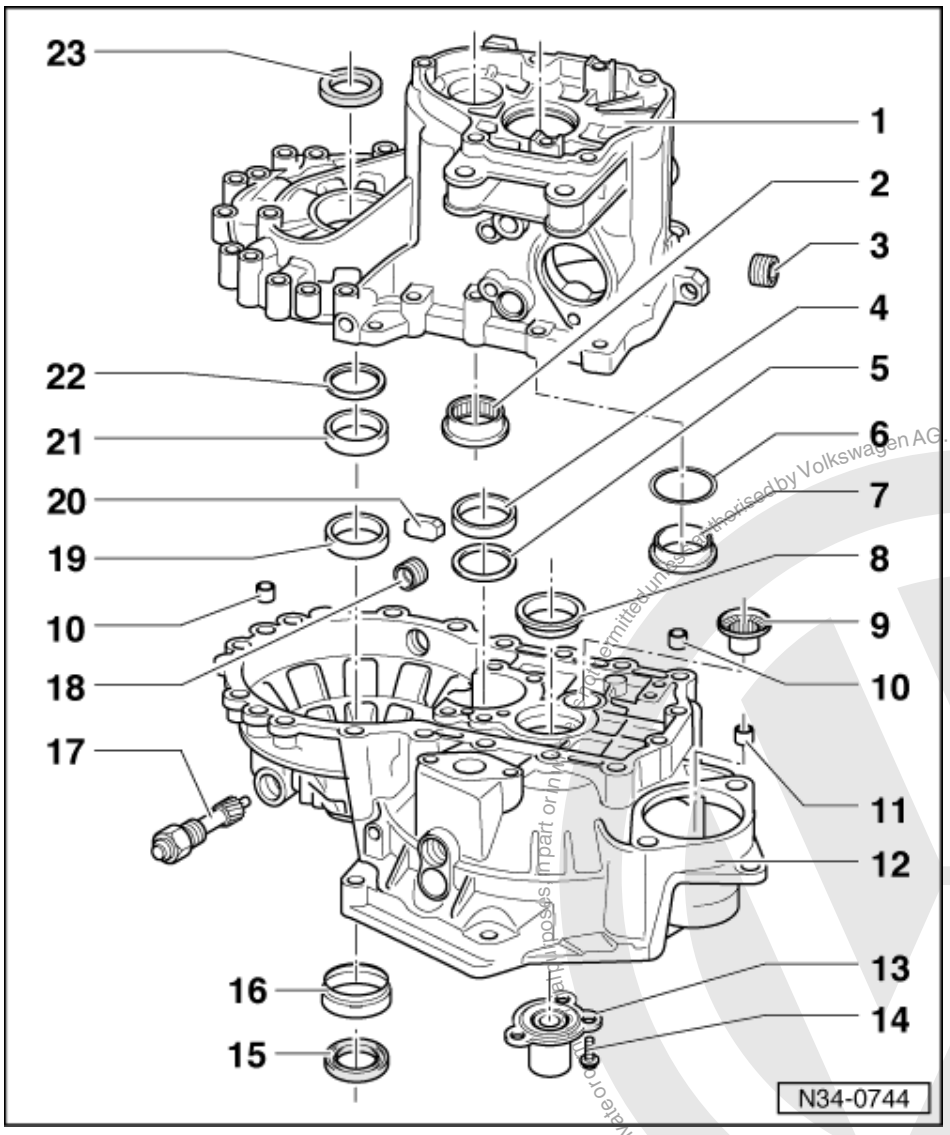

6 Shim
- For input shaft
- Adjustment overview
  => Page 195

7 Outer race/taper roller bearing
- For input shaft
- Removing and installing
  => Page 127
- If replaced: Adjust input shaft
  => Page 133

8 Outer race/taper roller bearing
- For input shaft
- Removing and installing
  => Page 131
- If replaced: Adjust input shaft
  => Page 133

9 Needle bearing
- Removing and installing
  => Page 174

Protected by copyright. Copying for private or commercial purposes, in part or in whole, is not permitted unless authorised by Volkswagen AG. Volkswagen AG does not guarantee or accept any liability with respect to the correctness of information in this document. Copyright by Volkswagen AG.
satelettronica

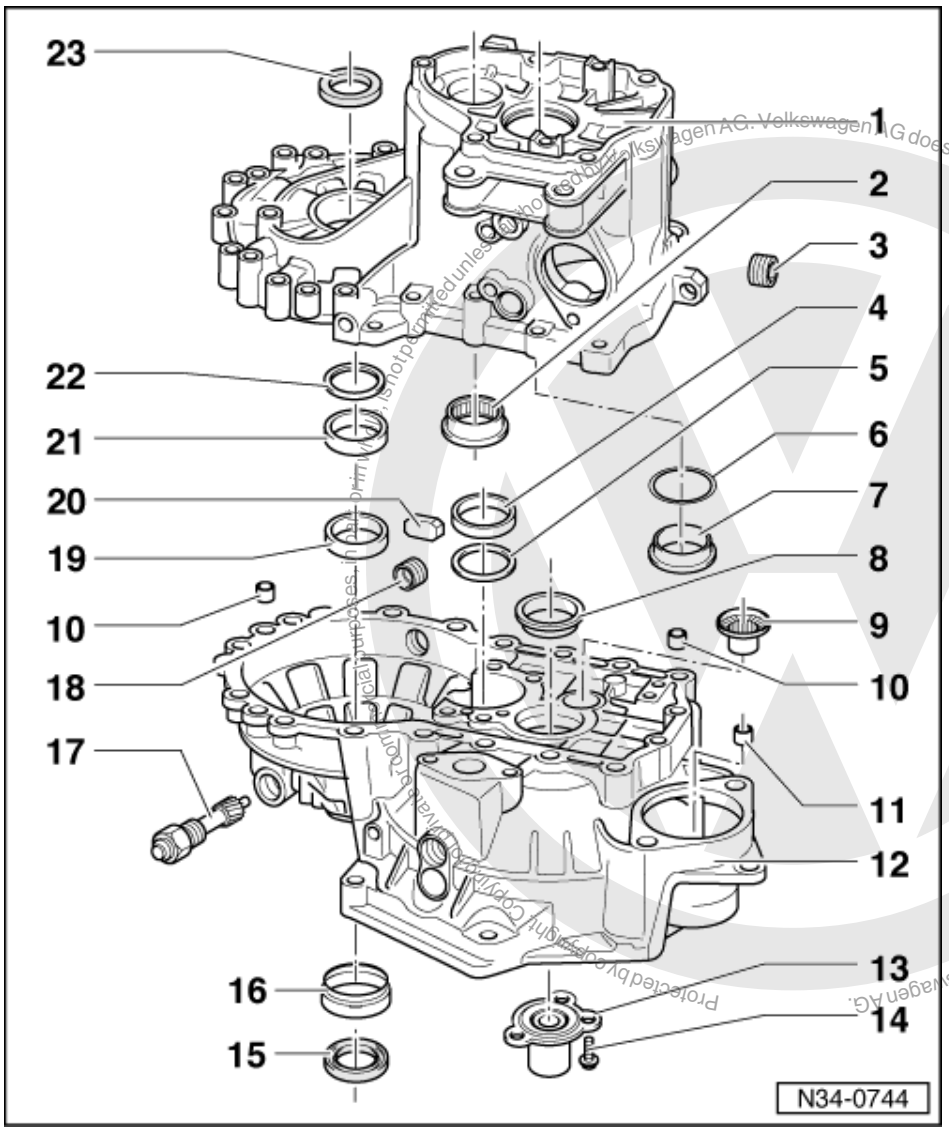

10 Dowel sleeve
- (Qty. 2)

11 Starter bush
- Pulling out => Fig. 5
- Knocking in => Fig. 6
- Can be replaced without removing gearbox

12 Clutch housing
- If replaced: =>Adjustment overview, Page 195

13 Guide sleeve
- With input shaft seal and a vulcanised O ring
- Knocking-out oil seal => Fig. 3
- Knocking-in oil seal => Fig. 4
- Remove guide sleeve to change the oil seal
- If damaged replace guide sleeve and O-ring together

satelettronica

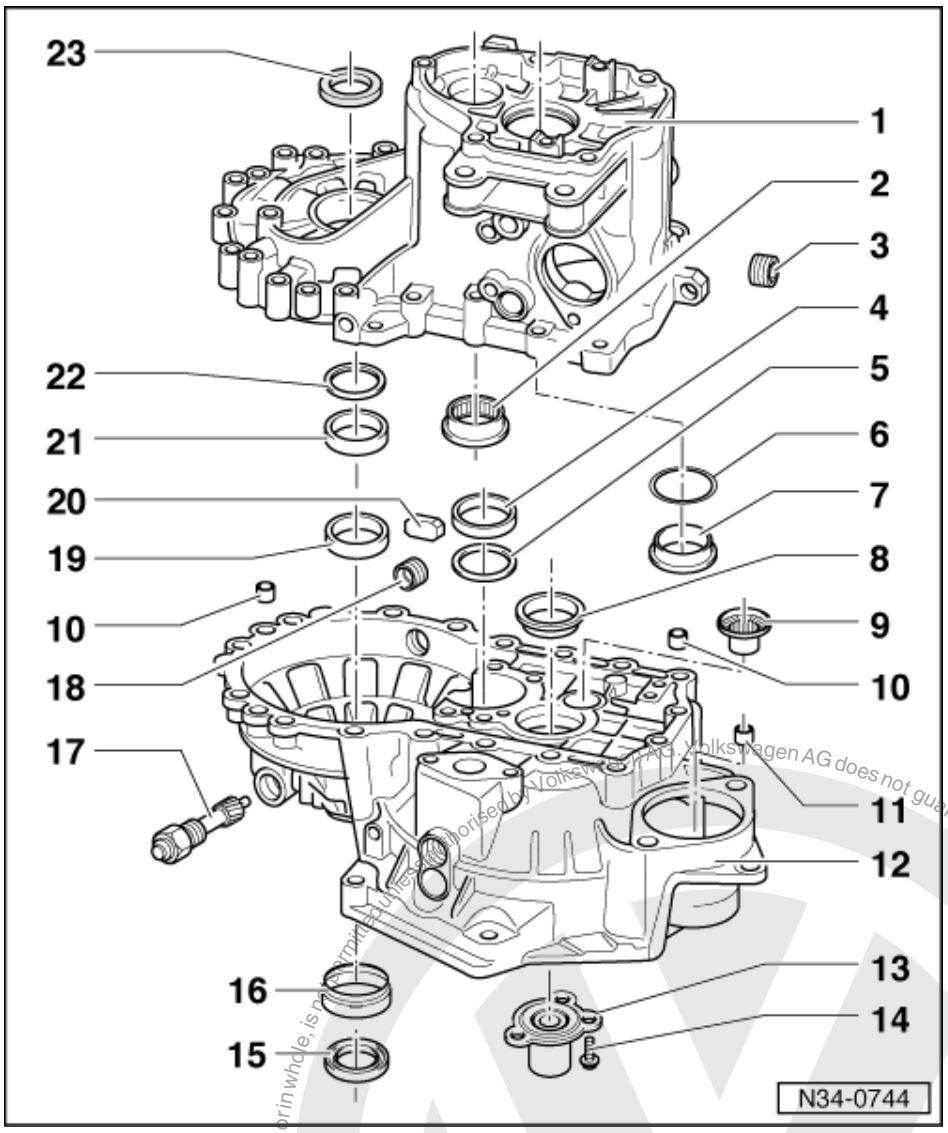

14 Socket head bolt, 20 Nm
- Self-locking
- Always renew

15 Oil seal
- Renew => Page 176

16 Sleeve
- For oil seal (Item 15)
- Removing => Fig. 7
- Installing => Fig. 8

17 Speedometer drive, 30 Nm

18 Oil drain plug, 25 Nm
- Without magnet

19 Outer race/taper roller bearing
- For differential
- Pressing in and out => Page 182
- If replaced: Adjust differential => page 196

satelettronica
Protected by copyright. Copying for private or commercial purposes, in part or in whole, is not permitted unless authorised by Volkswagen AG. Volkswagen AG does not guarantee or accept any liability with respect to the correctness of information in this document. Copyright by Volkswagen AG.

Copyright. Copying for private or commercial purposes, in part or in whole, is not permitted unless authorised by Volkswagen AG. Volkswagen AG does not guarantee or accept any liability with respect to the correctness of information in this document.

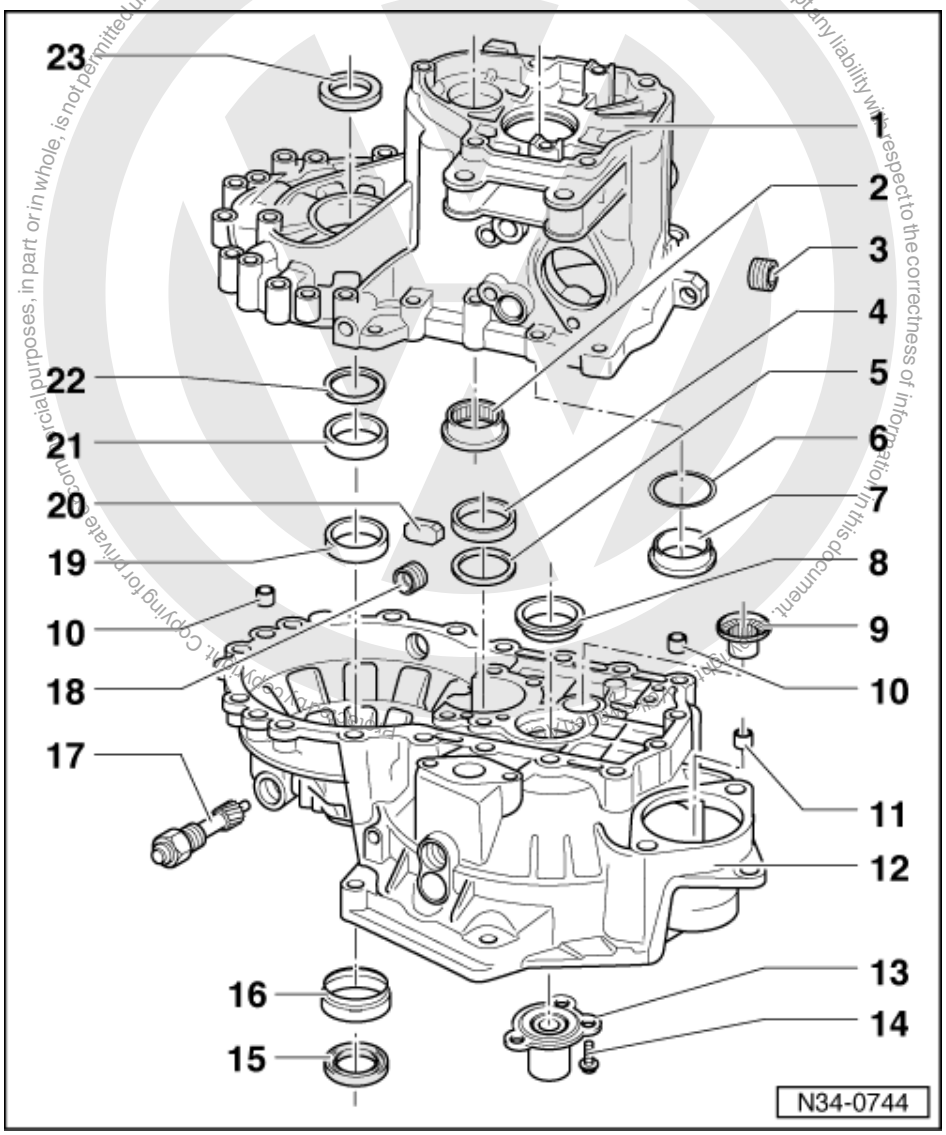

20 Magnet

- Held in place by housing joint surface

21 Outer race/taper roller bearing

- For differential
- Pressing in and out
  => Page 182
- If replaced: Adjust differential
  => page 196

22 Shim

- For differential
- Adjustment overview
  => Page 195

23 Oil seal

- Renew => Page 176

satelettronica

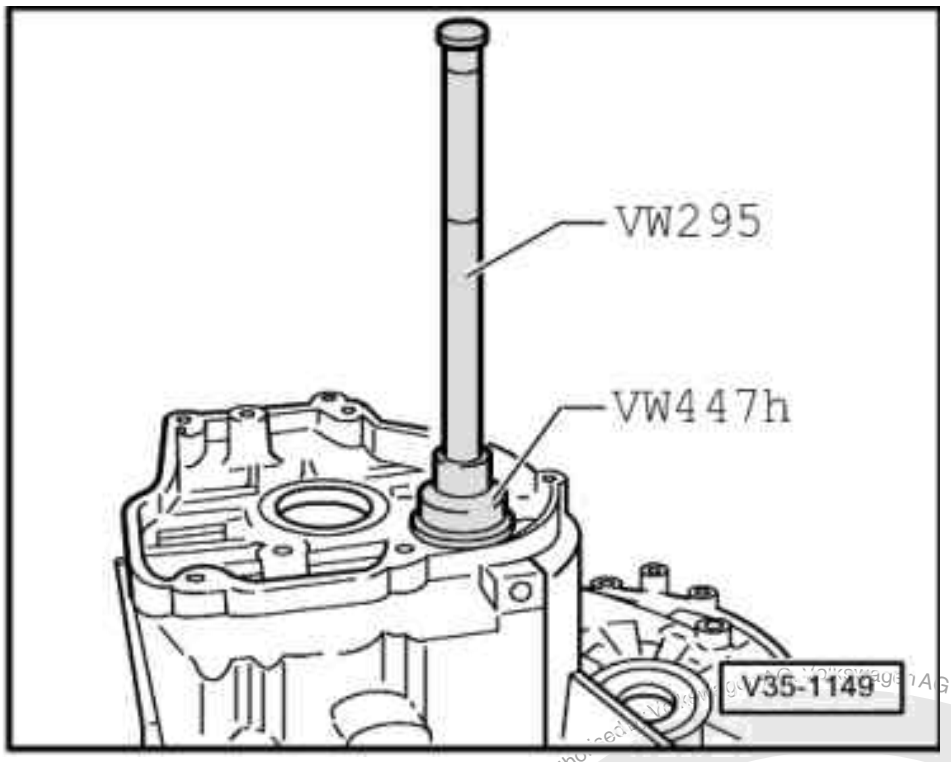

-> Fig.1 Knocking-out needle roller bearing.

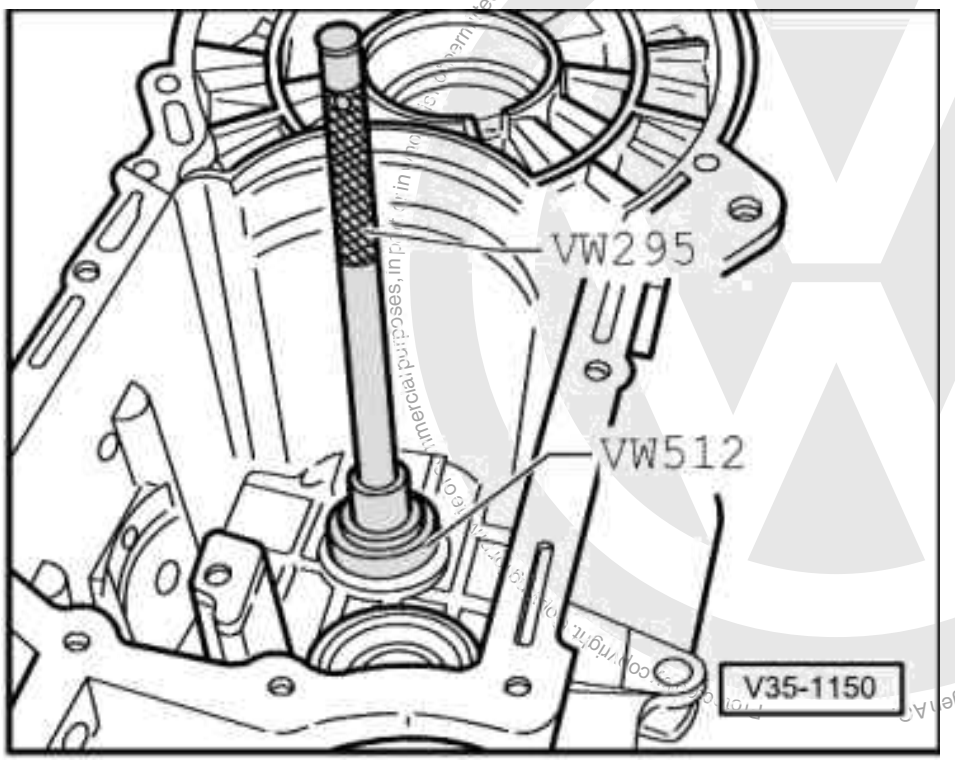

-> Fig.2 Knocking needle roller bearing in onto stop

- Secure needle roller bearing in gearbox housing at three points (120° offset) with a punch.

satelettronica

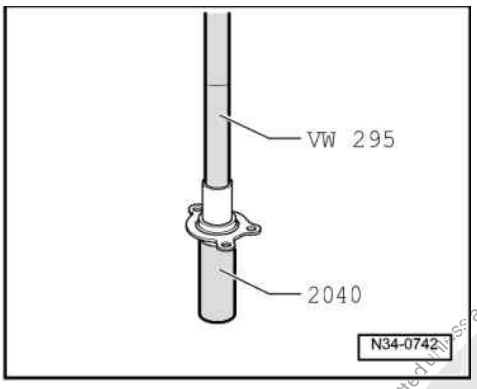

-> Fig.3 Knocking oil seal out of guide sleeve.

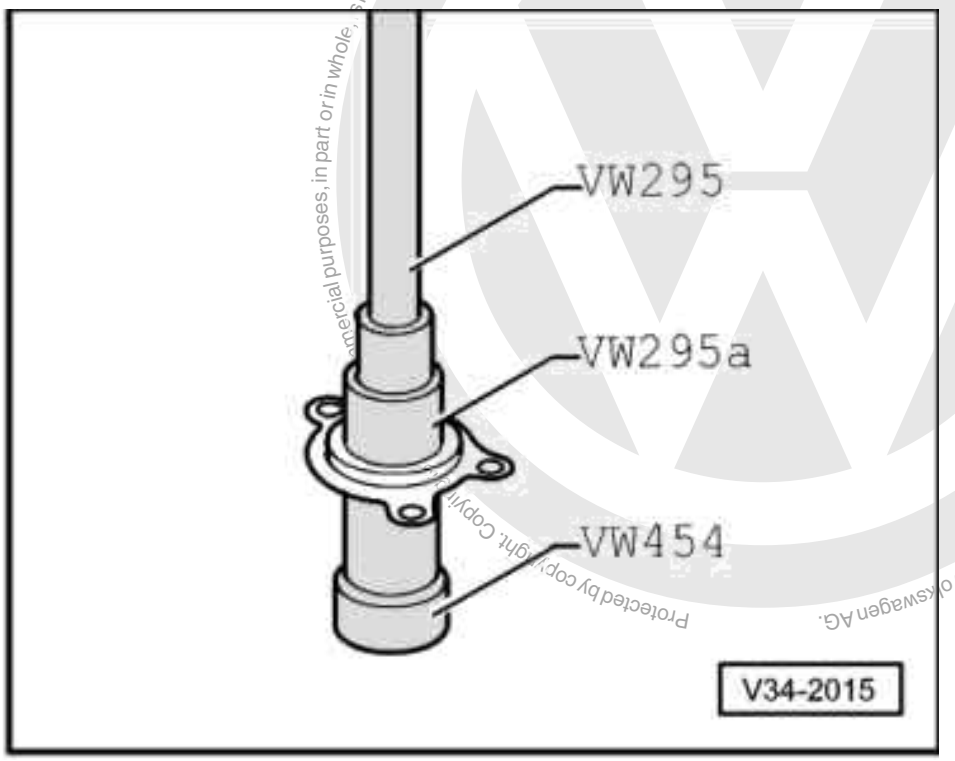

-> Fig.4 Knock oil seal into the guide sleeve onto stop.

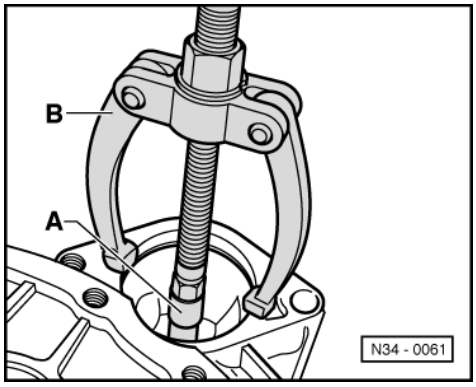

Protected by copyright. Copying for commercial purposes, in part or in whole, is not permitted unless authorised by Volkswagen AG. Volkswagen AG does not guarantee or accept any liability with respect to the correctness of information in this document. Copyright by Volkswagen AG.
satelettronica

-> Fig.5 Pulling out starter bush.

A - Internal extractor 12 ... 14.5 mm, e.g. Kukko 21/1

B - Counter support. e.g. Kukko 22/1

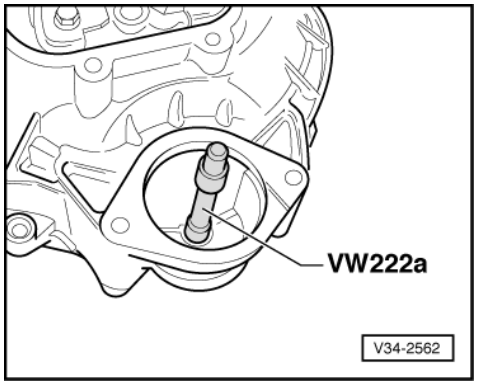

-> Fig.6 Knocking in starter bush.

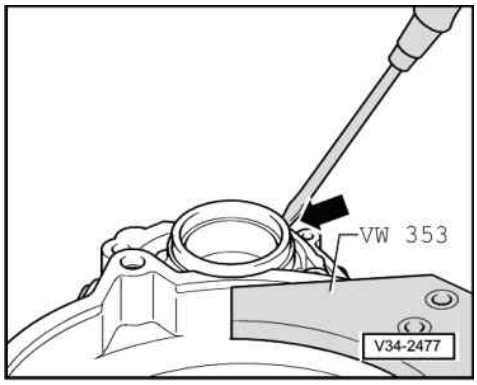

-> Fig.7 Lever out sleeve -arrow- with screwdriver

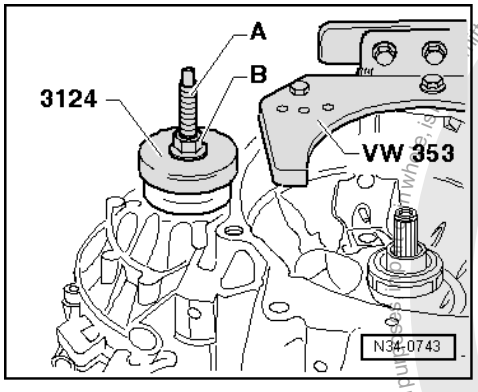

-> Fig.8 Pulling sleeve in

A - Screw threaded rod from assembly tool 3066 into differential threaded piece
B - Nut M12 with washer

- Pull sleeve in onto stop with thrust piece 3124 by turning on nut -B-.

satelettronica
Copyright by Volkswagen AG. Volkswagen AG does not guarantee or accept any liability with respect to the correctness of information in this document.
Protected by copyright. Copying for private or commercial purposes, in part or in whole, is not permitted unless authorised by Volkswagen AG.

Note:

When gearbox is dismantled press sleeve in with thrust piece 3124 onto stop.

6 - Dismantling and assembling gearbox selector mechanism

6.1 - Dismantling and assembling gearbox selector mechanism

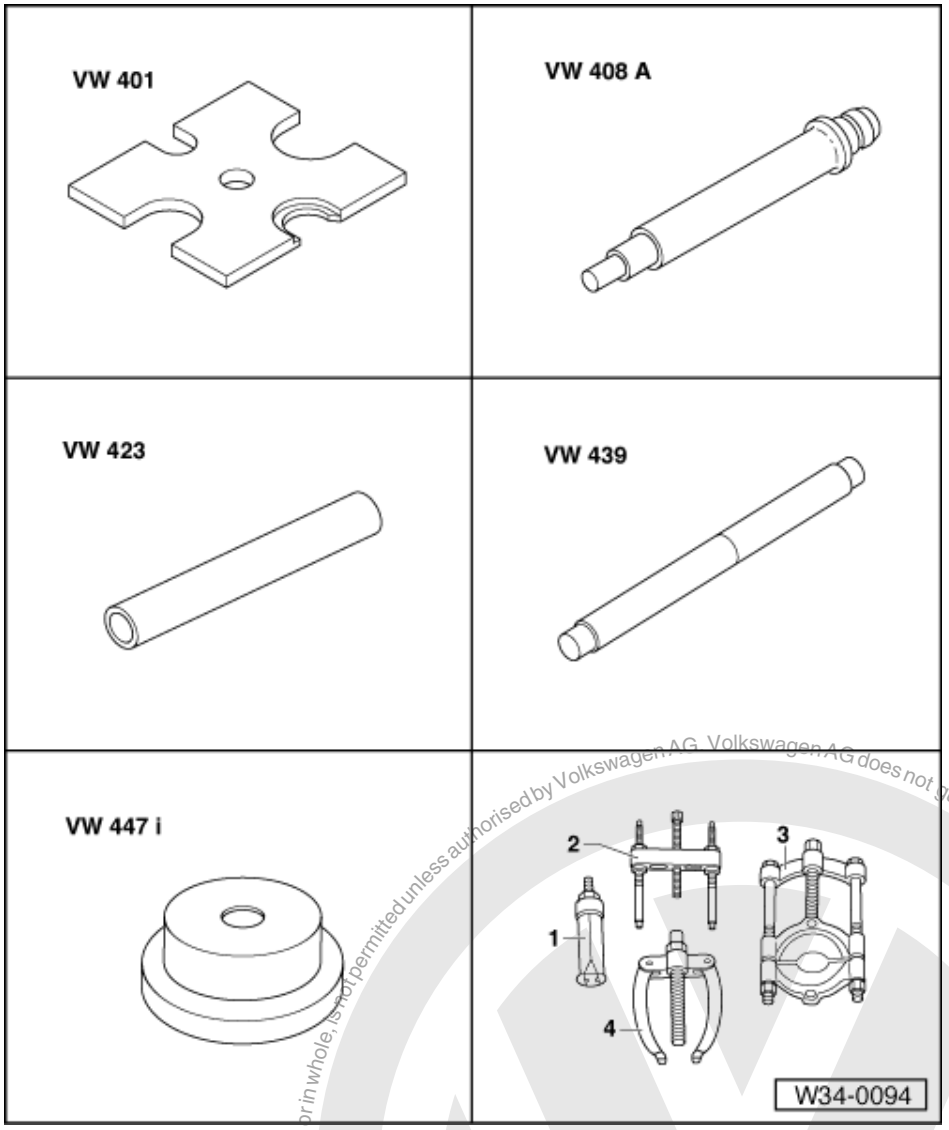

Special tools and workshop equipment required

- VW 401 Thrust plate
- VW 408 A Press tool
- VW 423 Tube
- VW 439 Guide pin
- VW 447 i Thrust plate
- 1 - Kukko 21/3 Internal puller

Protected by copyright. Copying for private or commercial purposes, part or in whole, is not permitted unless authorised by Volkswagen AG. Volkswagen AG does not guarantee or accept any liability with respect to the correctness of information in this document. Copyright by Volkswagen AG.
satelettronica

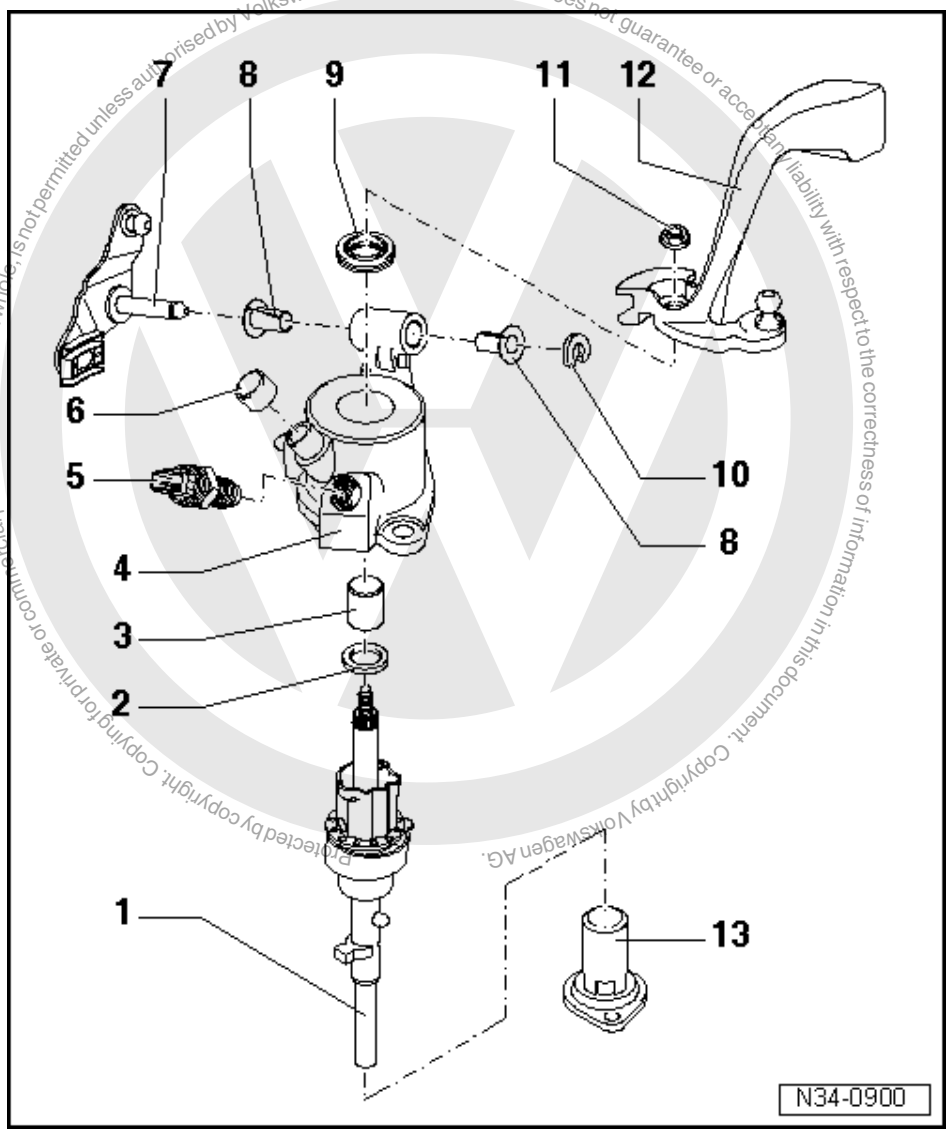

1 Selector shaft
- Revised stop sleeves, which allows the selector shaft to be guided into the 4th gear gate when changing down from 5th to 4th gear, have been introduced as of gearbox build date 04 09 0 =>Fig. 4
- From gearbox build date 06 08 1 additional locking mechanism in end cover =>Fig. 5

2 Stop ring

3 Ball sleeve
- Removing => Fig. 1
- Pressing in => Fig. 2

4 Selector mechanism cover
- With an additional bolt which allows the selector shaft to be guided into the 4th gear gate when changing down from 5th to 4th gear, have been introduced as of gearbox build date 04 09 0 => Fig. 4

satelettronica

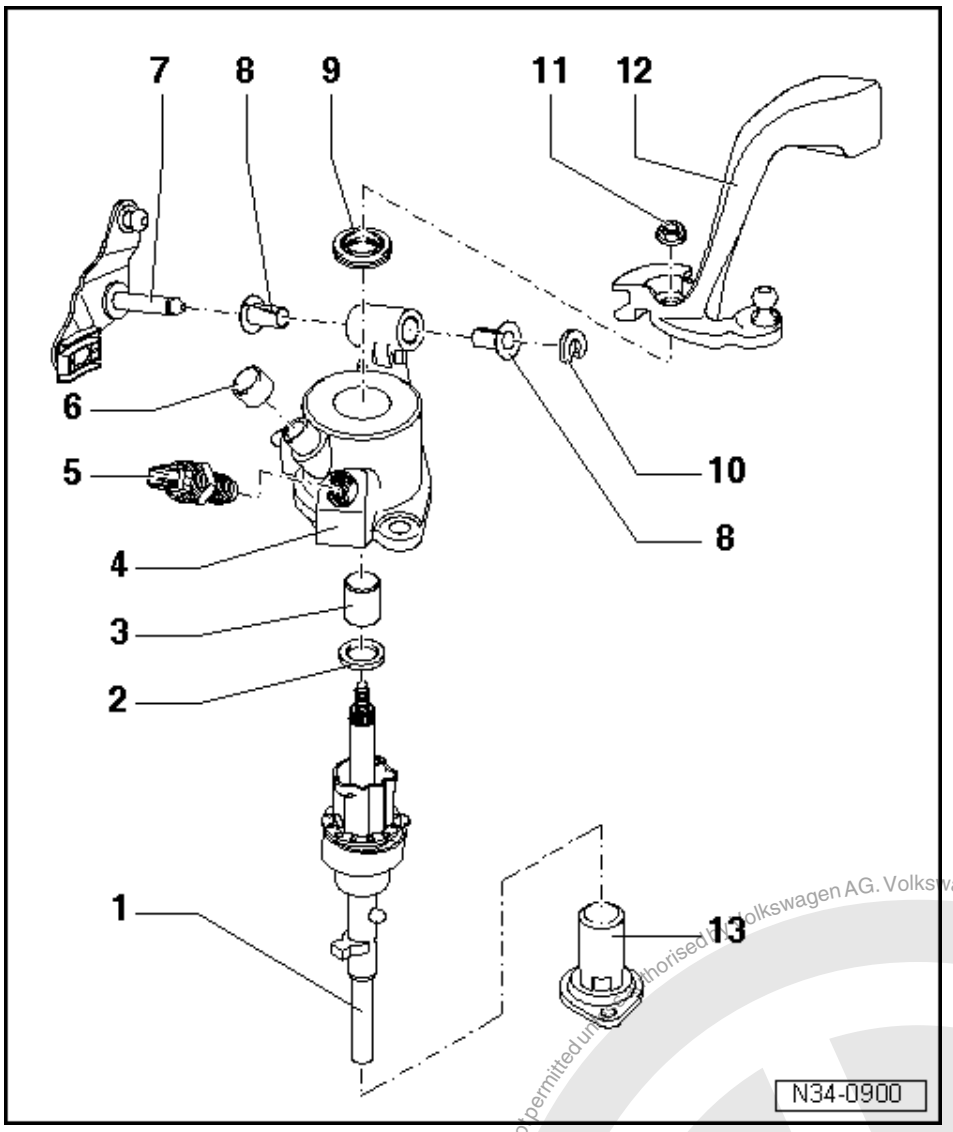

5 Reversing light switch, 20 Nm
- Lightly coat lug with MoS2 grease

6 Cap
- For gearbox breather

7 Relay lever
- Installation position => Page 46

8 Bush

9 Oil seal
- Lever out with screwdriver
- Installing => Fig. 3

10 Circlip

11 Hexagon nut, 25 Nm
- Self-locking
- Always renew

satelettronica
Protected by copyright. Copying for private or commercial purposes, in part or in whole, is not permitted unauthorised by Volkswagen AG. Volkswagen AG does not guarantee or accept any liability with respect to the correctness of information in this document. Copyright by Volkswagen AG.

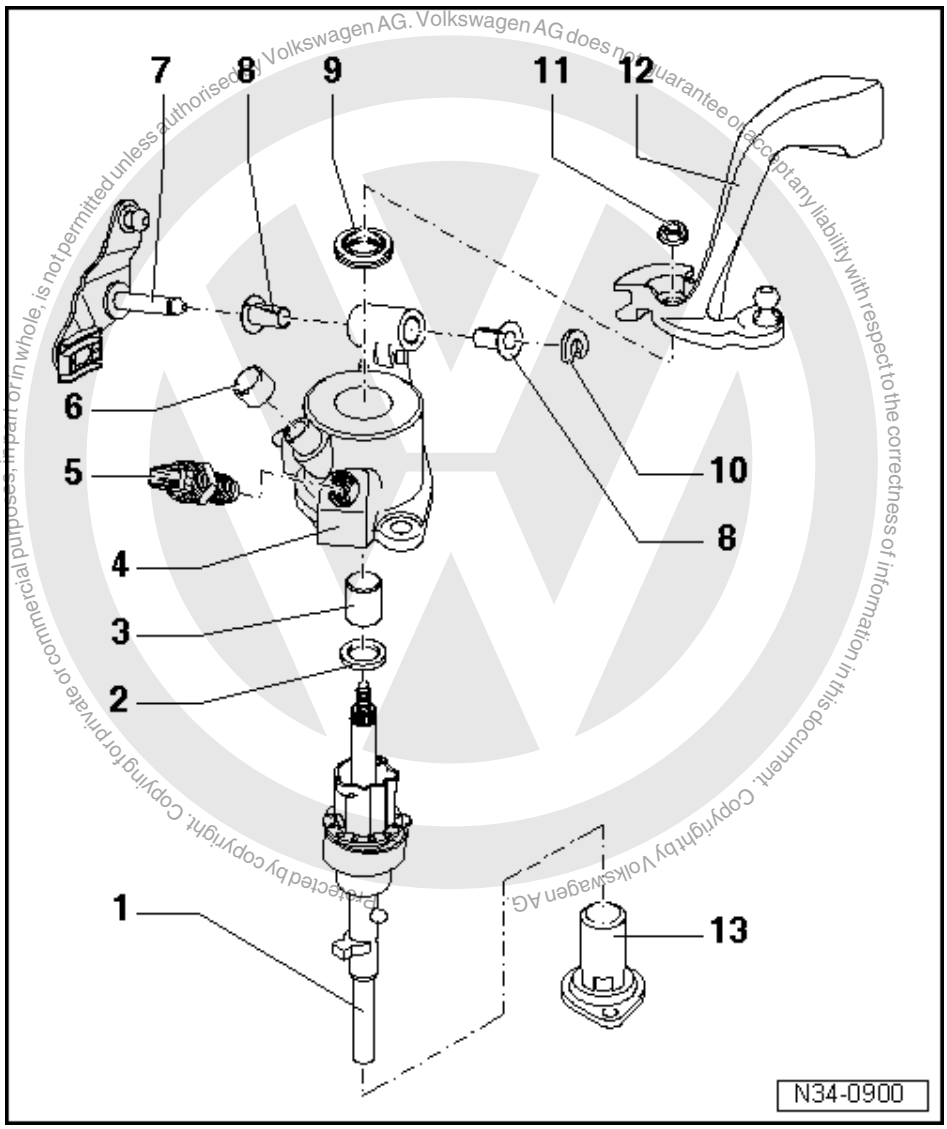

12 Gear selector lever

- Install so that the master spline aligns with selector shaft
- Can be replaced with the selector mechanism installed
- Installation position =>Page 46

13 End cover

- From gearbox build date 06 08 1 with locking mechanism for the selector shaft => Fig. 5

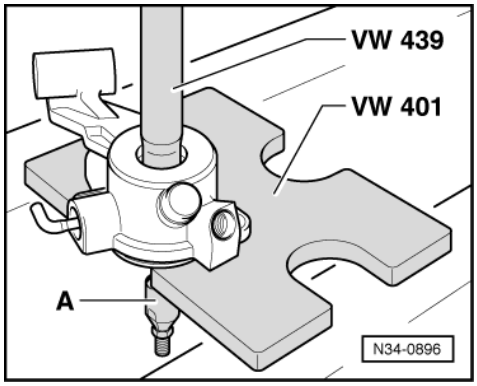

satelettronica

-> Fig.1 Removing ball sleeve from selector mechanism cover

- Before pulling out ball sleeve, destroy plastic cage and remove balls.

A - Internal extractor, e.g. Kukko 21/3, 18.5 ... 23.5 mm

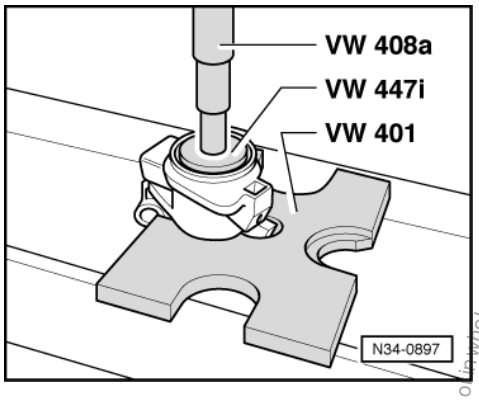

-> Fig.2 Pressing ball sleeve into selector mechanism cover

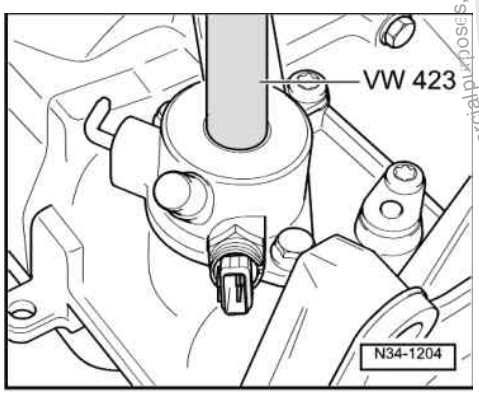

-> Fig.3 Installing oil seal onto stop

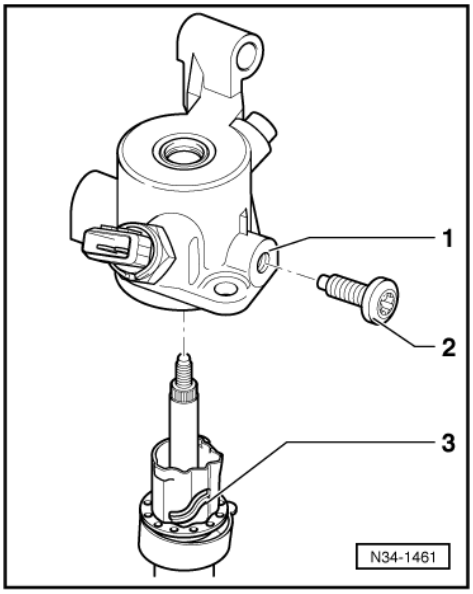

Protected by copyright. Copying for private or commercial purposes, in part or in whole, is not permitted unless authorised by Volkswagen AG. Volkswagen AG does not guarantee or accept any liability with respect to the correctness of information in this document. Copyright by Volkswagen AG.
satelettronica

-> Fig.4 Revised selector cover and selector shaft

As of gearbox build date 04 09 0 bolt -2- is installed in selector cover -1-.

Tightening torque

15 Nm

In conjunction with this the stop sleeve is fitted with a bridge -3-.

Functional check

When shifting down from 5th gear to 4th gear the bolt -2- guides the selector shaft over bridge -3- into 4th gear gate.

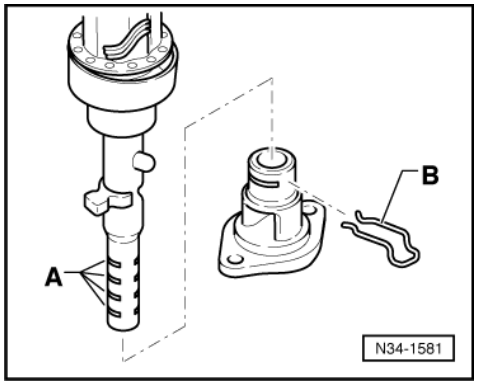

-> Fig.5 Revised selector shaft and selector cover

From gearbox build date 06 08 1 the selector shaft is equipped with four grooves -A-.

The spring clip -B- is inserted in the cover.

Functional check

Selector shaft is locked into cover by inserting a spring clip -B- through one of the grooves -A-, with a forward gear engaged.

Protected by copyright. Copying for private or commercial purposes, in part or in whole, is not permitted unless authorised by Volkswagen AG. Volkswagen AG does not guarantee or accept any liability with respect to the correctness of information in this document. Copyright by Volkswagen AG.
satelettronica

7 - Dismantling and assembling selector forks

7.1 - Dismantling and assembling selector forks

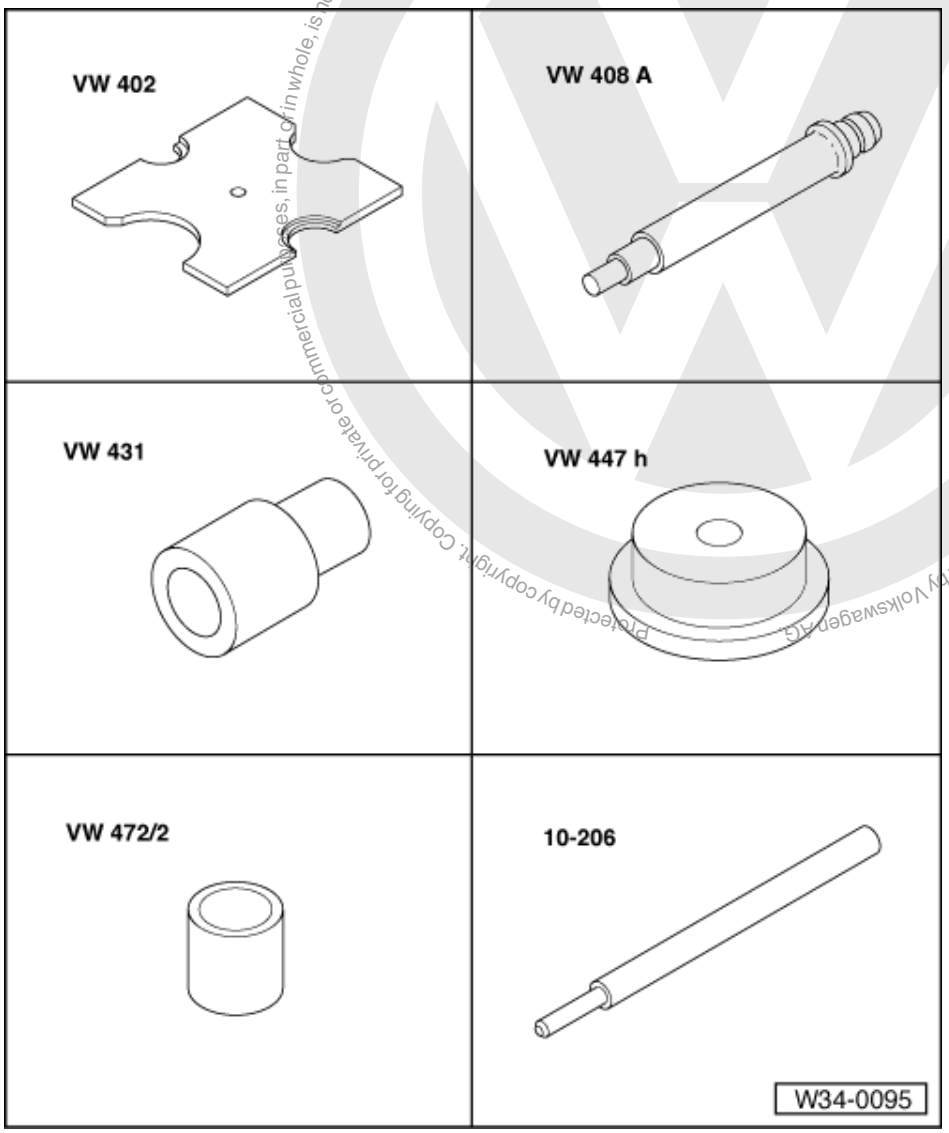

Special tools and workshop equipment required

- VW 402 Thrust plate
- VW 408 A Press tool
- VW 431 Press piece
- VW 447 H Press plate
- VW 472/2 Spacer sleeve
- 10-206 Drift

Protected by copyright. Copying for private or commercial purposes, in part or in whole, is not permitted unless authorised by Volkswagen AG. Volkswagen AG does not guarantee or accept any liability with respect to the correctness of information in this document. Copyright by Volkswagen AG.
satelettronica

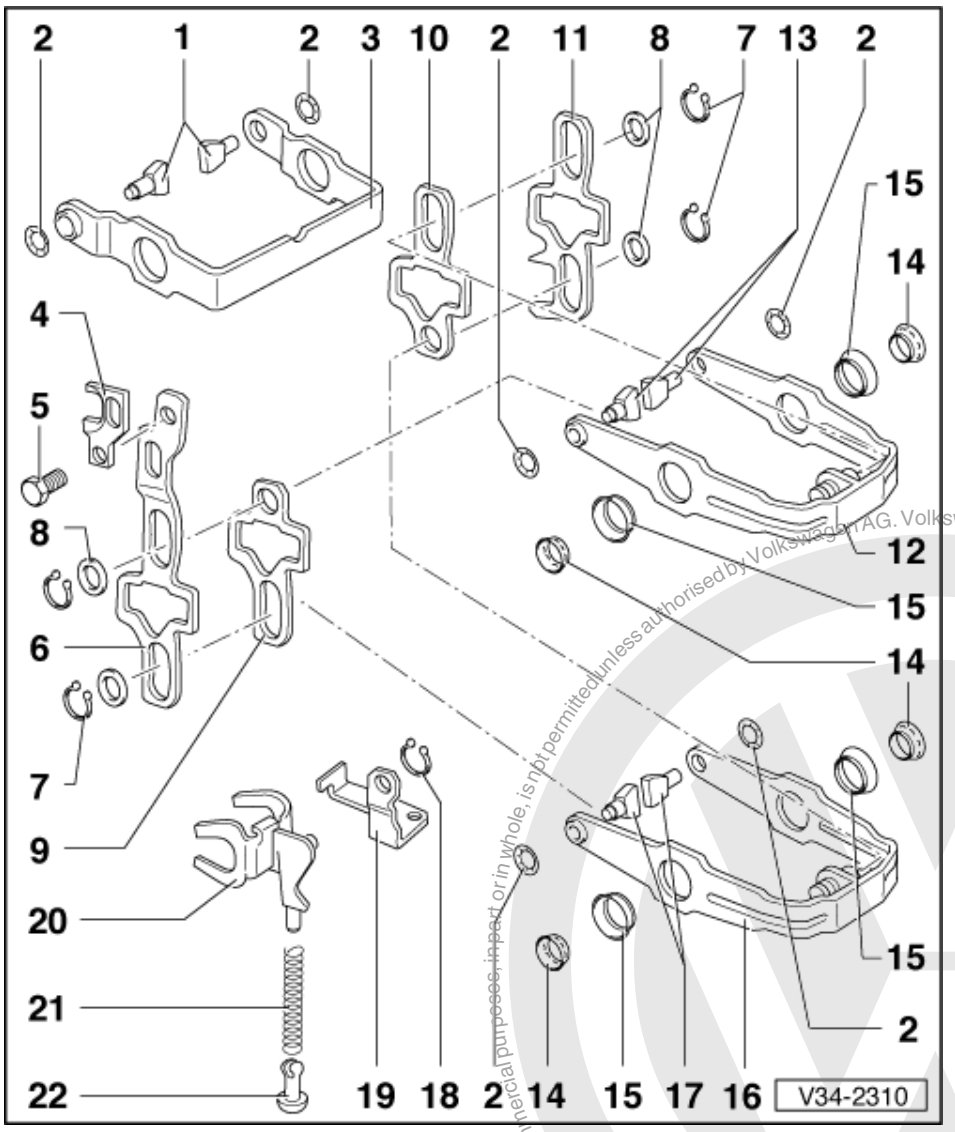

1 Selector segment
- Identification => Fig. 1
- After installing the circlip the selector segment must rotate freely

2 Circlip
- Lever off with screwdriver
- Installing => Fig. 2
- Always renew

3 5th gear selector fork
- Adjusting => Page 96

4 5th gear selector jaw

5 Bolt, 25 Nm

6 5th gear selector plate

7 Circlip

8 Washer

9 3rd/4th gear selector plate

Protected by copyright. Copying for private or commercial purposes, in part or in whole, is not permitted unless authorised by Volkswagen AG. Volkswagen AG does not guarantee or accept any liability with respect to the correctness of information in this document. Copyright by Volkswagen AG.
satelettronica

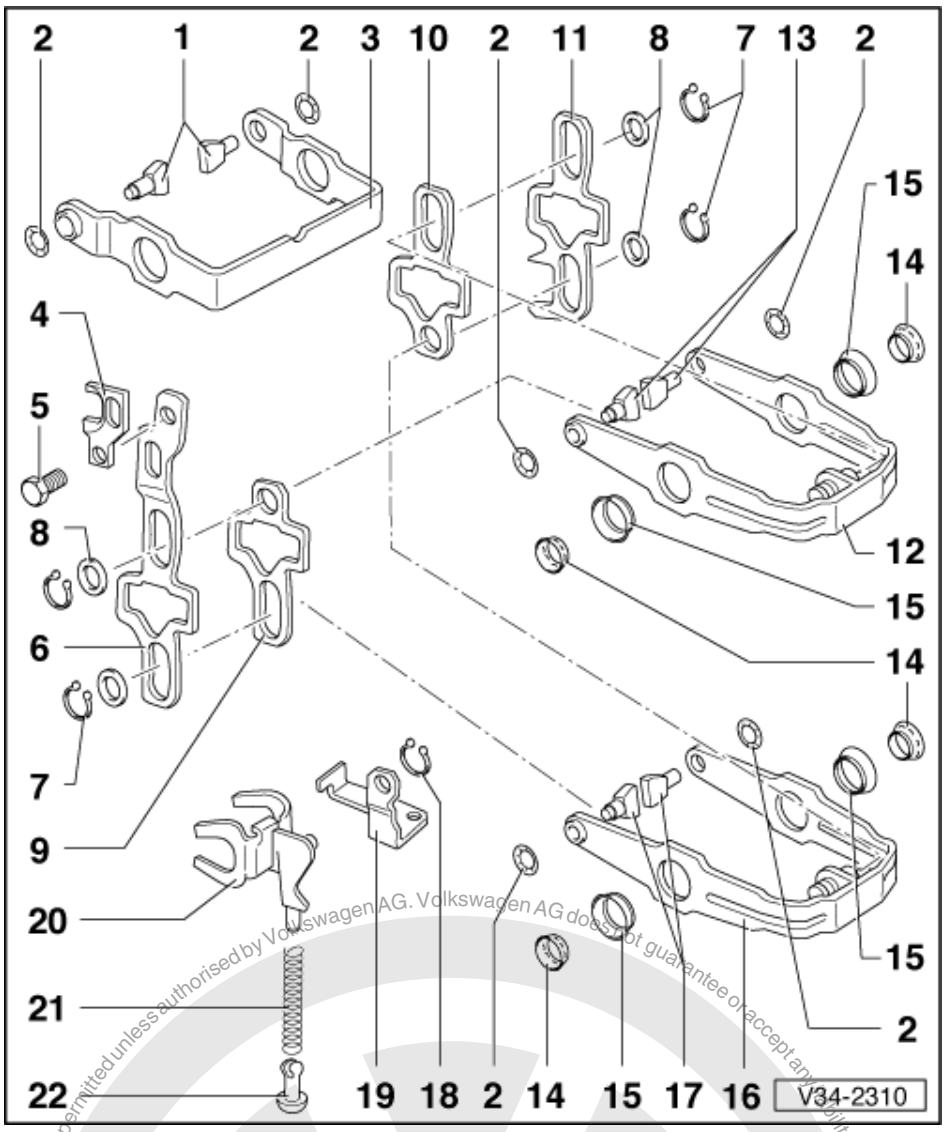

10 1st/2nd gear selector plate
11 Reverse gear selector plate
12 3rd/4th gear selector fork
- With selector segments => Fig. 5

13 Selector segment
- Identification => Fig. 1
- After installing the circlip the segment must rotate freely

14 Bearing
15 Bearing inner race
- Removing => Fig. 3
- Pressing in => Fig. 4

16 1st/2nd selector fork
- With selector segments => Fig. 5

Protected by copyright. Copyright for private or commercial purposes, in part or in whole is not permitted unless authorised by Volkswagen AG. Volkswagen AG does not guarantee or accept any liability with respect to the correctness of information in this document. Copyright by Volkswagen AG.
satelettronica

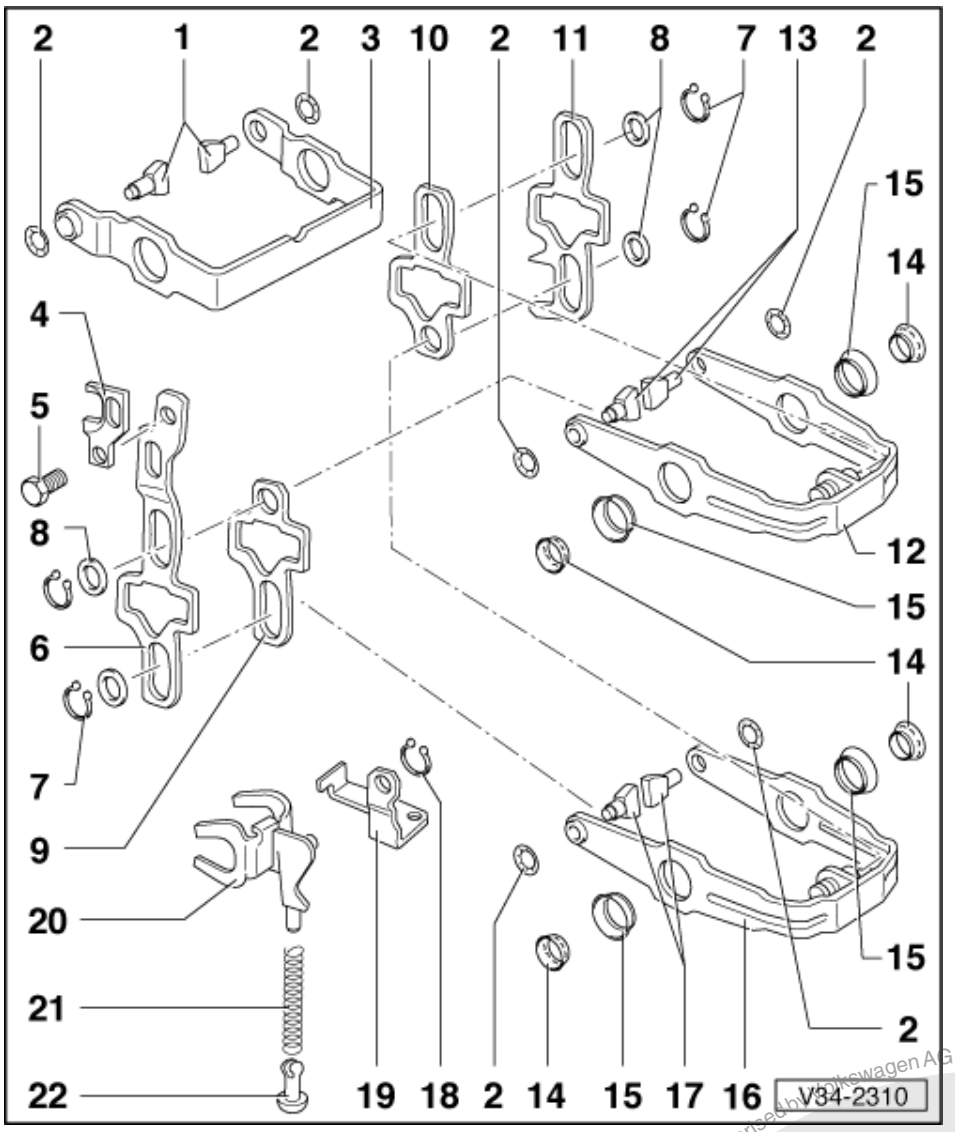

17 Selector segment

- Identification => Fig. 1
- After installing the circlip the segment must rotate freely

18 Circlip

19 Support for reverse gear selector fork

20 Reverse gear selector fork

21 Spring

22 Domed sliding piece

Protected by copyright. Copying for private or commercial purposes, in part or in whole, is not permitted unless authorised by Volkswagen AG. Volkswagen AG does not guarantee or accept any liability with respect to the correctness of information in this document. Copyright by Volkswagen AG.
satelettronica

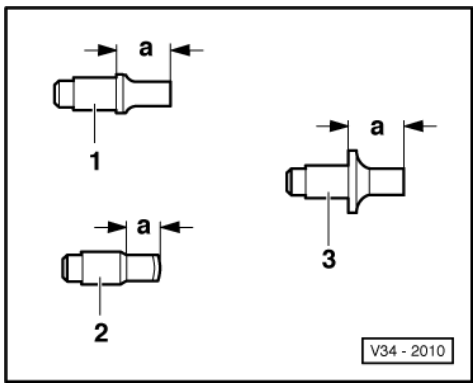

-> Fig.1 Identifying selector segments

Dimension -a-

1 - 1st and 2nd gear selector segments = 12.1 mm

2 - 3rd and 4th gear selector segments = 7.7 mm

3 - 5th gear selector segments = 12.1 mm

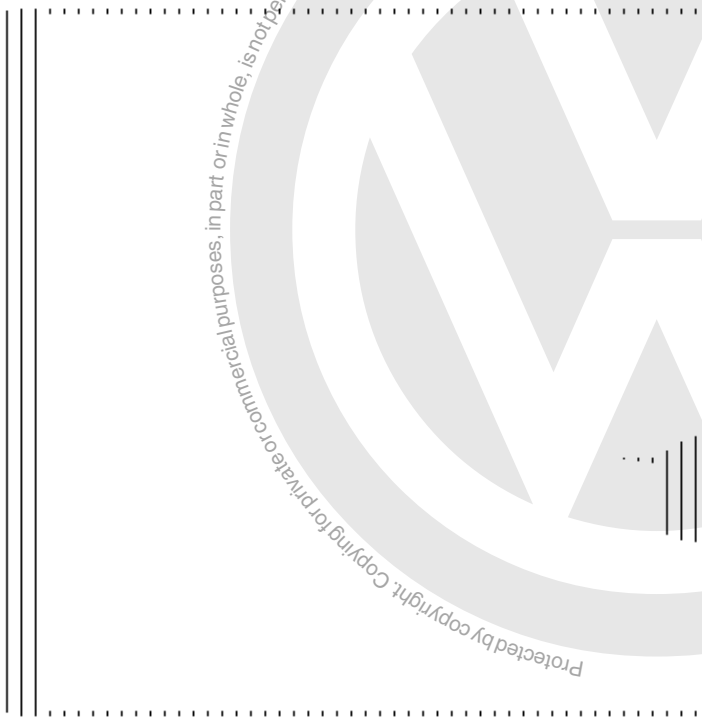

-> Fig.2 Installing circlip

- Press circlip into selector segment groove with socket.

Note:

After installing the circlip the selector segment must rotate freely.

Protected by copyright. Copying for private or commercial purposes, in part or in whole, is not permitted unless authorised by Volkswagen AG. Volkswagen AG does not guarantee or accept any liability with respect to the correctness of information in this document. Copyright by Volkswagen AG.
satelettronica

A - Socket driver, 10 mm A/F

B - Jaw protectors

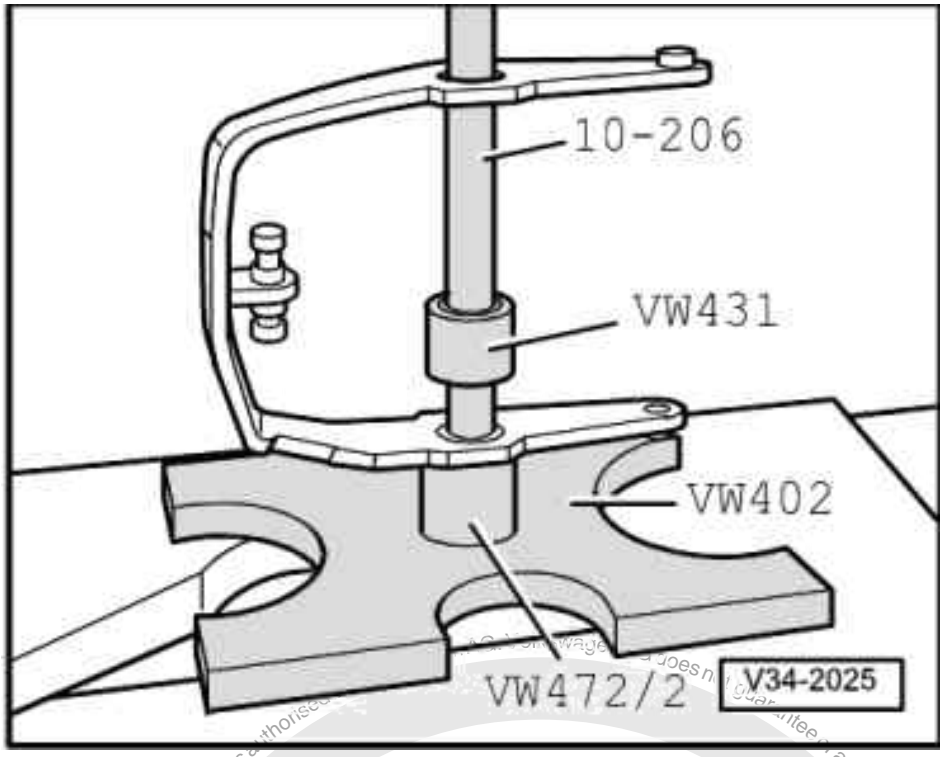

-> Fig.3 Removing bearing inner race

Note:

When removing and installing the inner races do not bend selector forks.

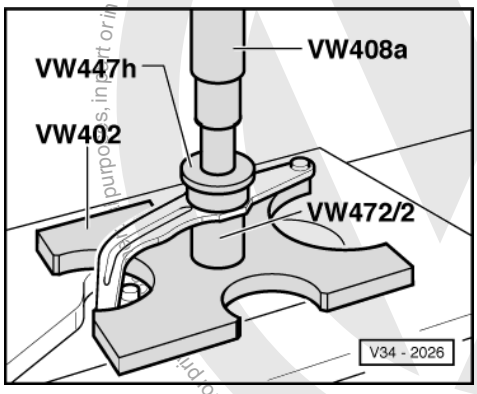

Protected by copyright. Copying for private or commercial purposes, in part or in whole, is not permitted unless authorised by Volkswagen AG. Volkswagen AG does not guarantee or accept any liability with respect to the correctness of information in this document. Copyright by Volkswagen AG.
satelettronica

-> Fig.4 Pressing inner race in onto stop

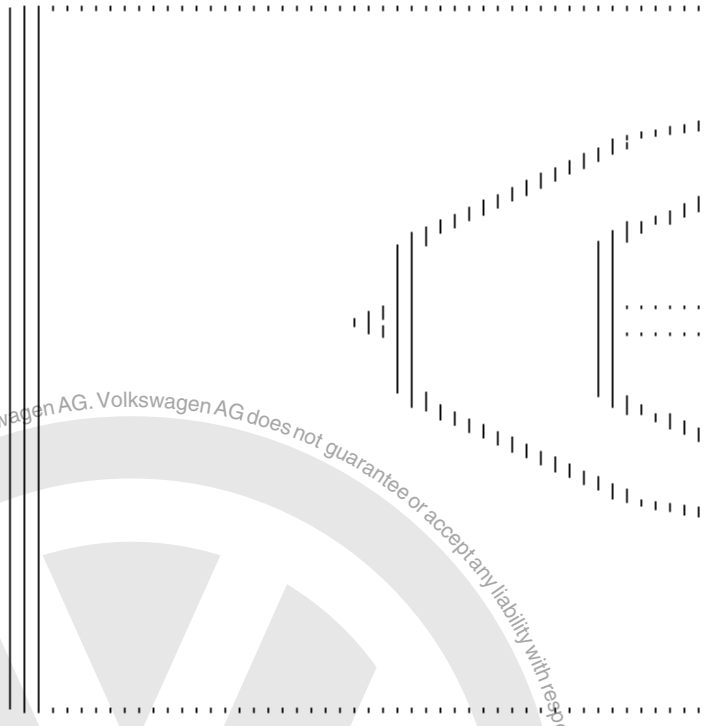

-> Fig.5 Selector fork with selector segments installed

	Dim. -a- (mm)
1st/2nd gear selector fork	87.2 ... 87.9
3rd/4th gear selector forks	96.0 ... 96.7

Selector segment assignment => Fig. 1 .

Protected by copyright. Copying for private or commercial purposes, in part or in whole, is not permitted unless authorised by Volkswagen AG. Volkswagen AG does not guarantee or accept any liability with respect to the correctness of information in this document. Copyright by Volkswagen AG.

satelettronica

35 - Gears, Shafts

1 - Dismantling and assembling input shaft

1.1 - Dismantling and assembling input shaft

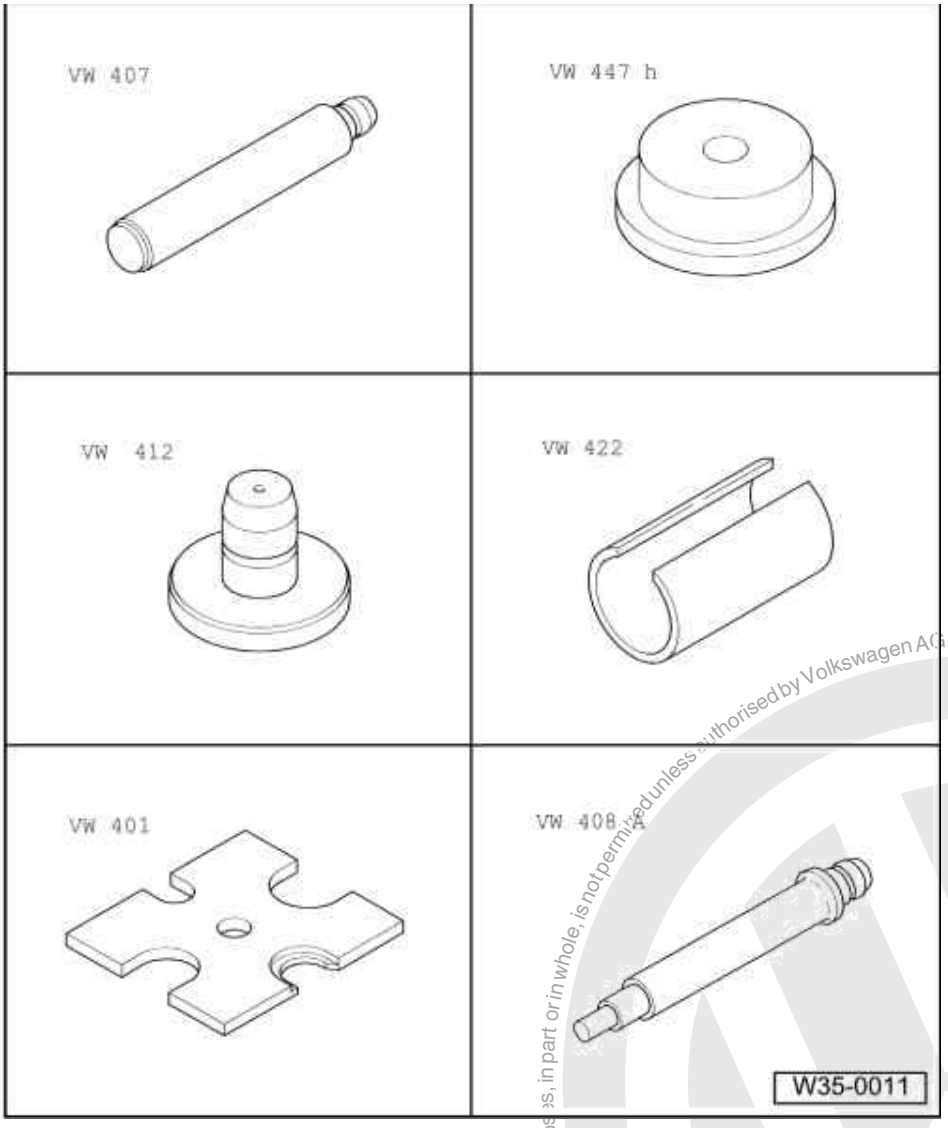

Special tools and workshop equipment required

- VW 407 Press tool
- VW 447 H Press plate
- VW 412 Press tool
- VW 422 Tube
- VW 401 Thrust plate
- VW 408 A Press tool

Protected by copyright. Copying for private or commercial purposes, in part or in whole, is not permitted unless authorised by Volkswagen AG. Volkswagen AG does not guarantee or accept any liability with respect to the correctness of information in this document. Copyright by Volkswagen AG.
satelettronica

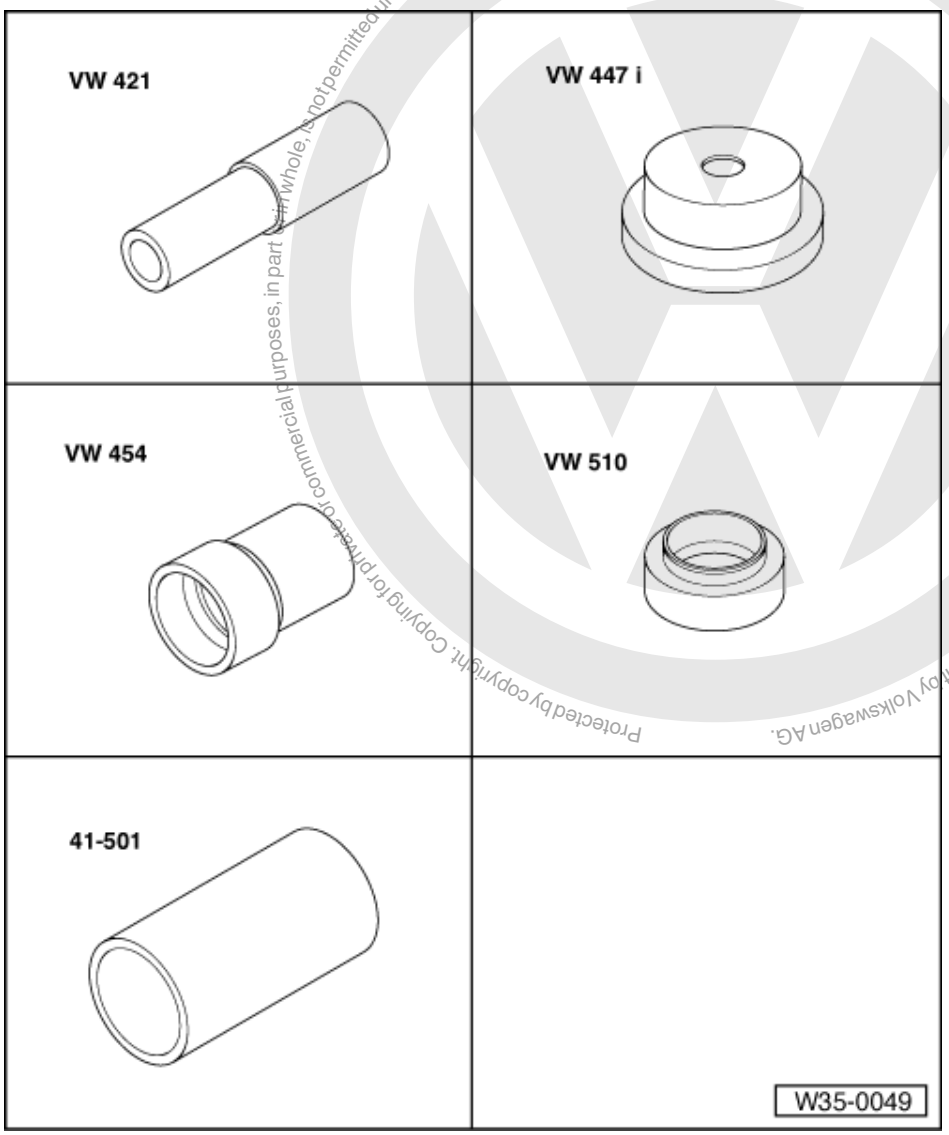

Protected by copyright. Copying for private or commercial purposes, in part or in whole, is not permitted unless authorised by Volkswagen AG. Volkswagen AG does not guarantee or accept any liability with respect to the correctness of information in this document. Copyright by Volkswagen AG.

satelettronica

Special tools and workshop equipment required

- VW 421 Tube
- VW 454 Press piece
- VW 447 i Thrust plate
- VW 510 Press piece
- 41-501 Drift sleeve

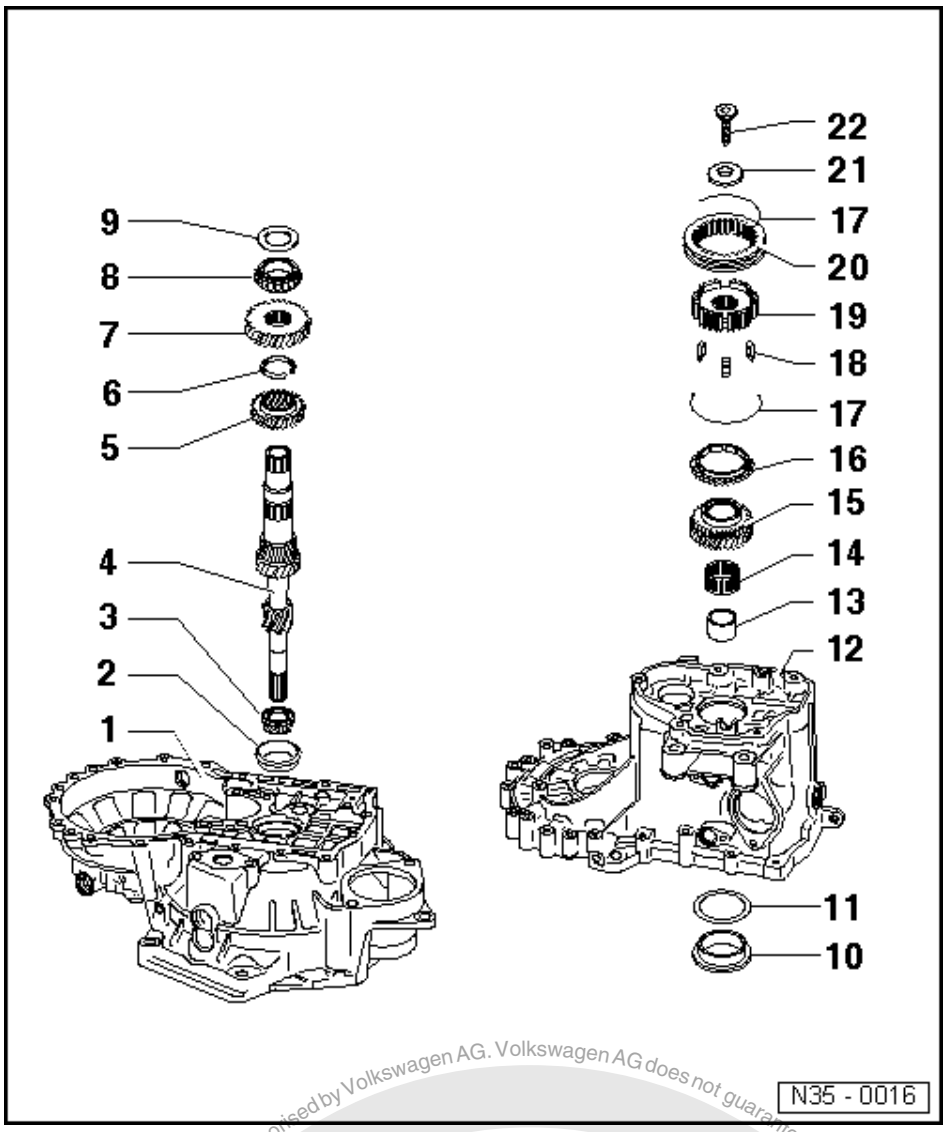

Notes:

- When installing new gears, consult technical data =>page 2 .
- If the position of the taper roller bearings is affected when exchanging parts, the input shaft must be re-adjusted. See adjustment overview => Page 195

1 Clutch housing
2 Taper roller bearing outer race
  - Pressing out => Fig. 1
  - Pressing in => Fig. 2
3 Taper roller bearing inner race
  - Knock-off the input shaft with a drift
  - Pressing on => fig. 3
4 Input shaft
  - Adjusting => Page 133

Protected by copyright. Copying for private or commercial purposes, in part or in whole, is not permitted unless authorised by Volkswagen AG. Volkswagen AG does not guarantee or accept any liability with respect to the correctness of information in this document. Copyright by Volkswagen AG.

satelettronica

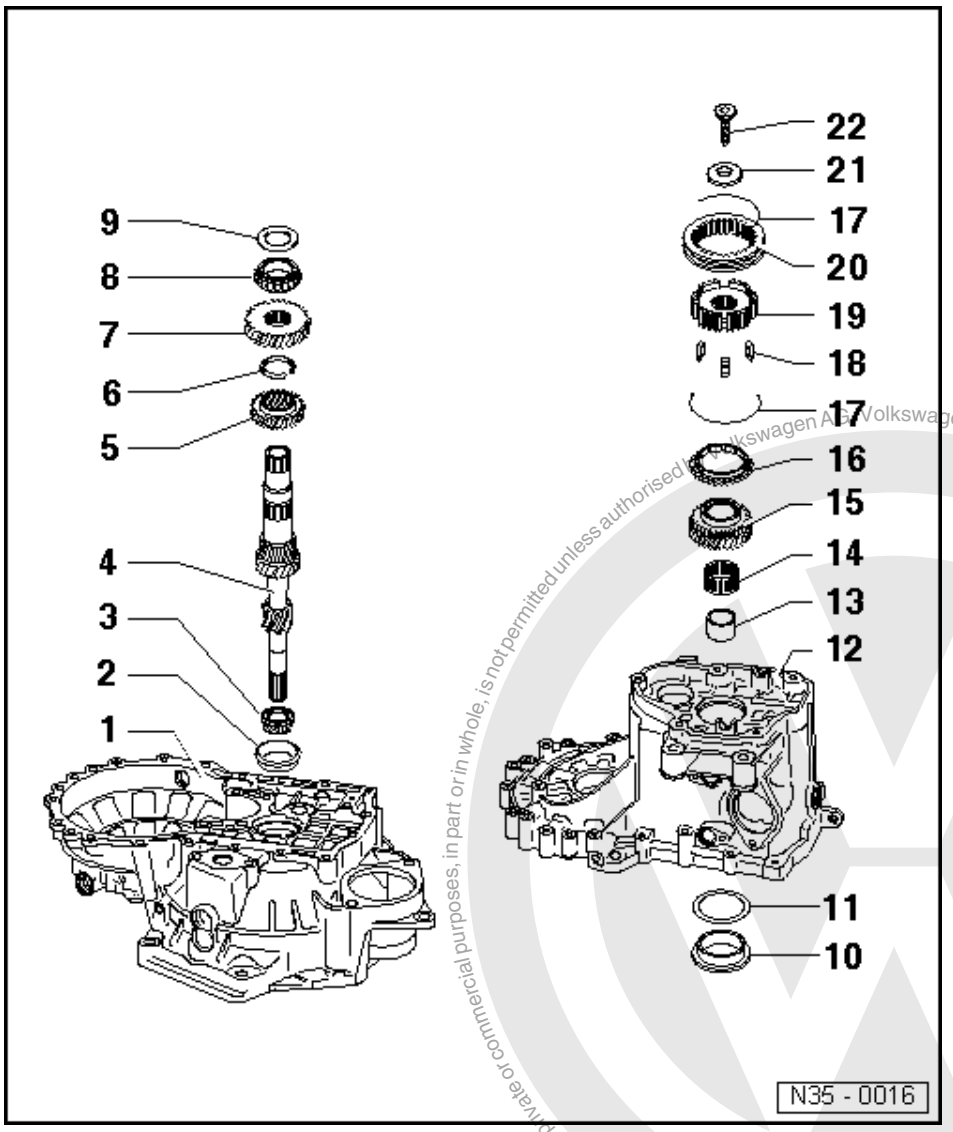

5 3rd gear
- Shoulder points to 4th gear
- Pressing off => Fig. 5
- Pressing on => Fig. 6

6 Circlip
- Always renew

7 4th gear
- Pressing off with taper roller bearing outer race and sleeve => Fig. 4
- Pressing on => Fig. 7
- Collar faces to 3rd gear

8 Taper roller bearing inner race
- Pressing off with 4th gear wheel and sleeve => Fig. 4
- Pressing on => Fig. 8

9 Thrust washer

10 Taper roller bearing outer race
- Pressing out => Fig. 10
- Pressing in => Fig. 11

Protected by copyright. Copying for private or commercial purposes, in part or in whole, is not permitted unless authorised by Volkswagen AG. Volkswagen AG does not guarantee or accept any liability with respect to the correctness of information in this document. Copyright by Volkswagen AG.
satelettronica

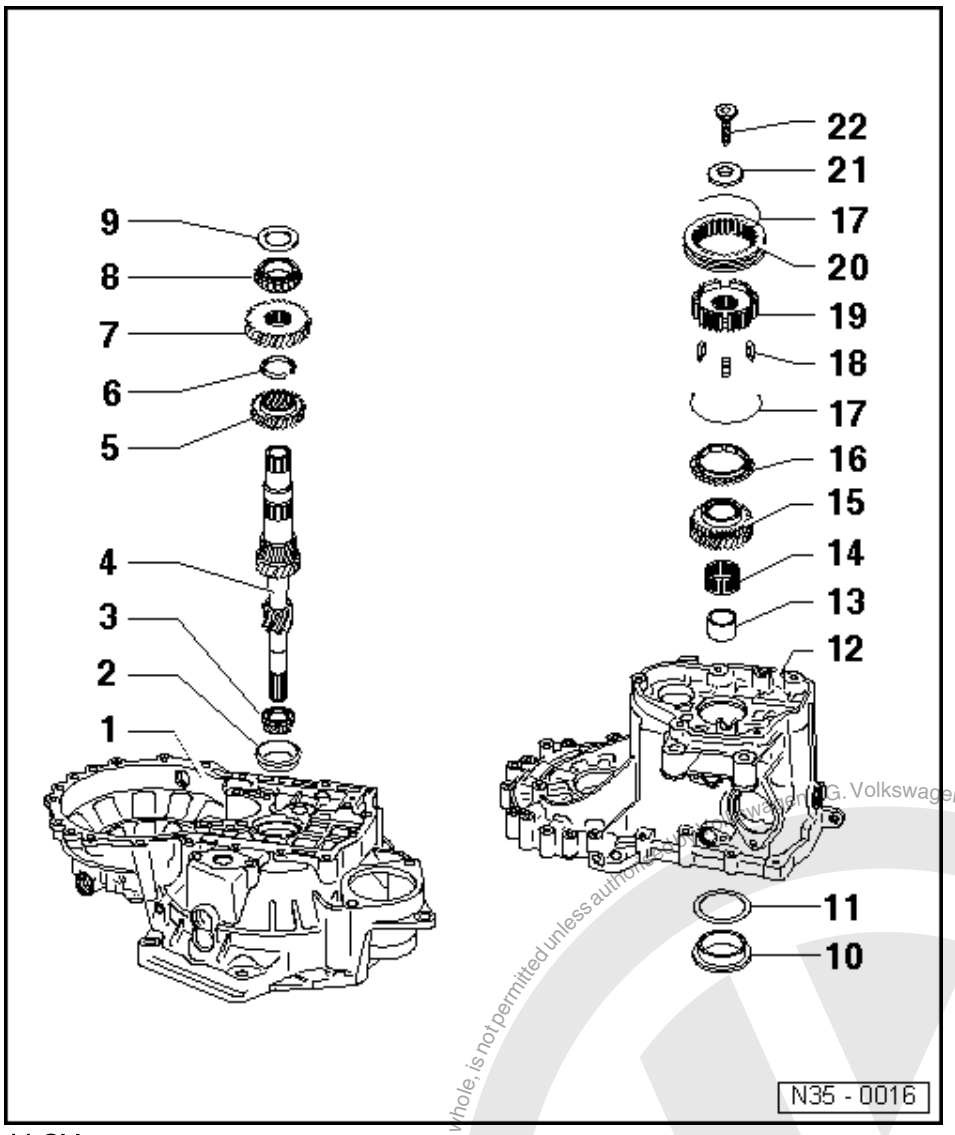

11 Shim
- Determining thickness => adjusting input shaft, Page 133

12 Gearbox housing

13 Sleeve
- For needle roller bearing
- Press off with 4th gear wheel and taper roller bearing inner race => Fig. 4
- Pressing on => fig. 9
- Place thrust washer on before installing (item 9)

14 Needle roller bearing

15 Selector gear for 5th gear
- Pull off together with 5th gear synchro-hub =>from Page 79

Protected by copyright. Copying for private or commercial purposes, in part or in whole, is not permitted unless authorised by Volkswagen AG. Volkswagen AG does not guarantee or accept any liability with respect to the correctness of information in this document. Copyright by Volkswagen AG.
satelettronica

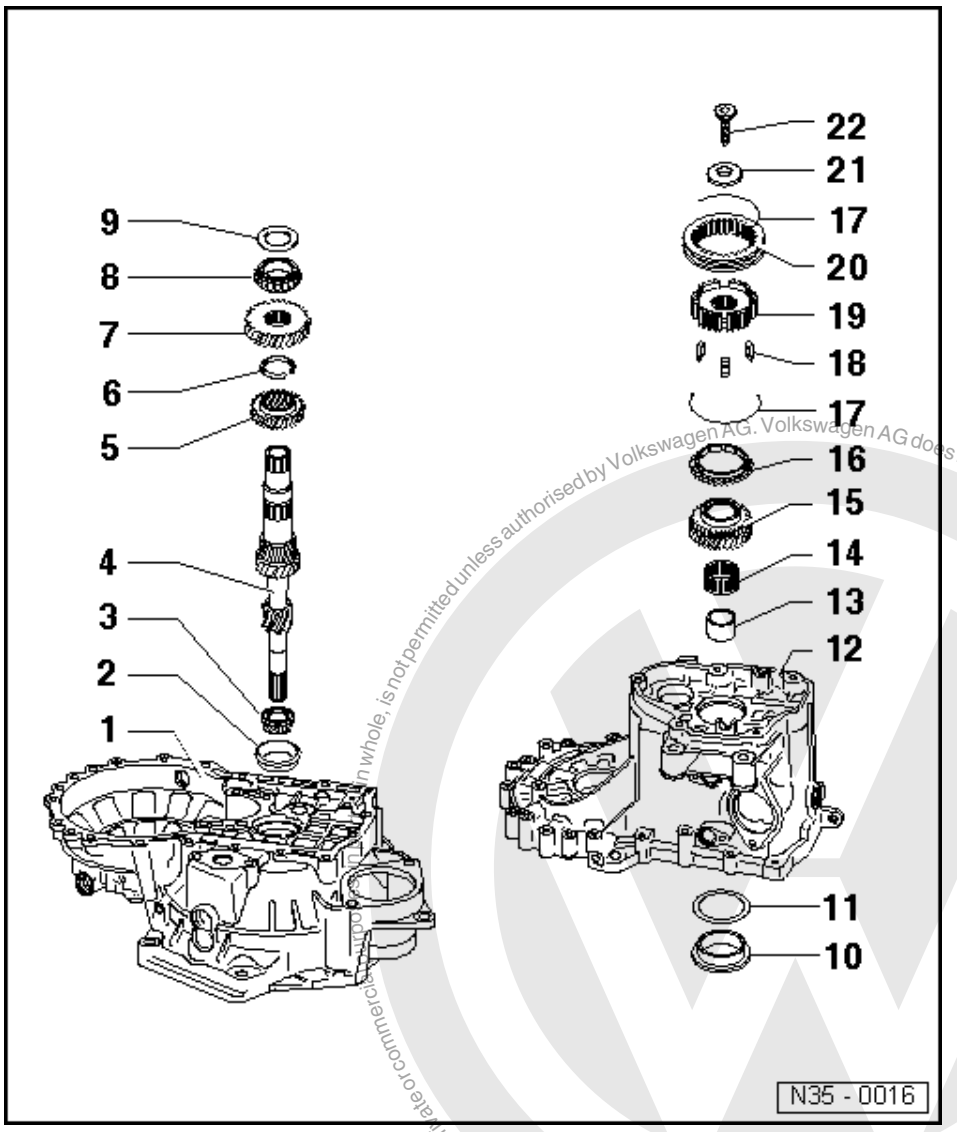

16 5th gear synchro-ring
- With cast locking pieces
  => Illustration N35-0018, Page 94
- Check for wear
  => Page 93

17 Spring
- Installation position => Fig. 13

18 Locking pieces (Qty. 3)
- Installation position => Fig. 12

19 5th gear synchro-hub
- Removing and installing
  => Page 79

20 5th gear locking collar
- Removing and installing
  =>Page 79

Protected by copyright. Copying for private or commercial purposes, in whole, is not permitted unless authorised by Volkswagen AG. Volkswagen AG does not guarantee or accept any liability with respect to the correctness of information in this document. Copyright by Volkswagen AG.
satelettronica

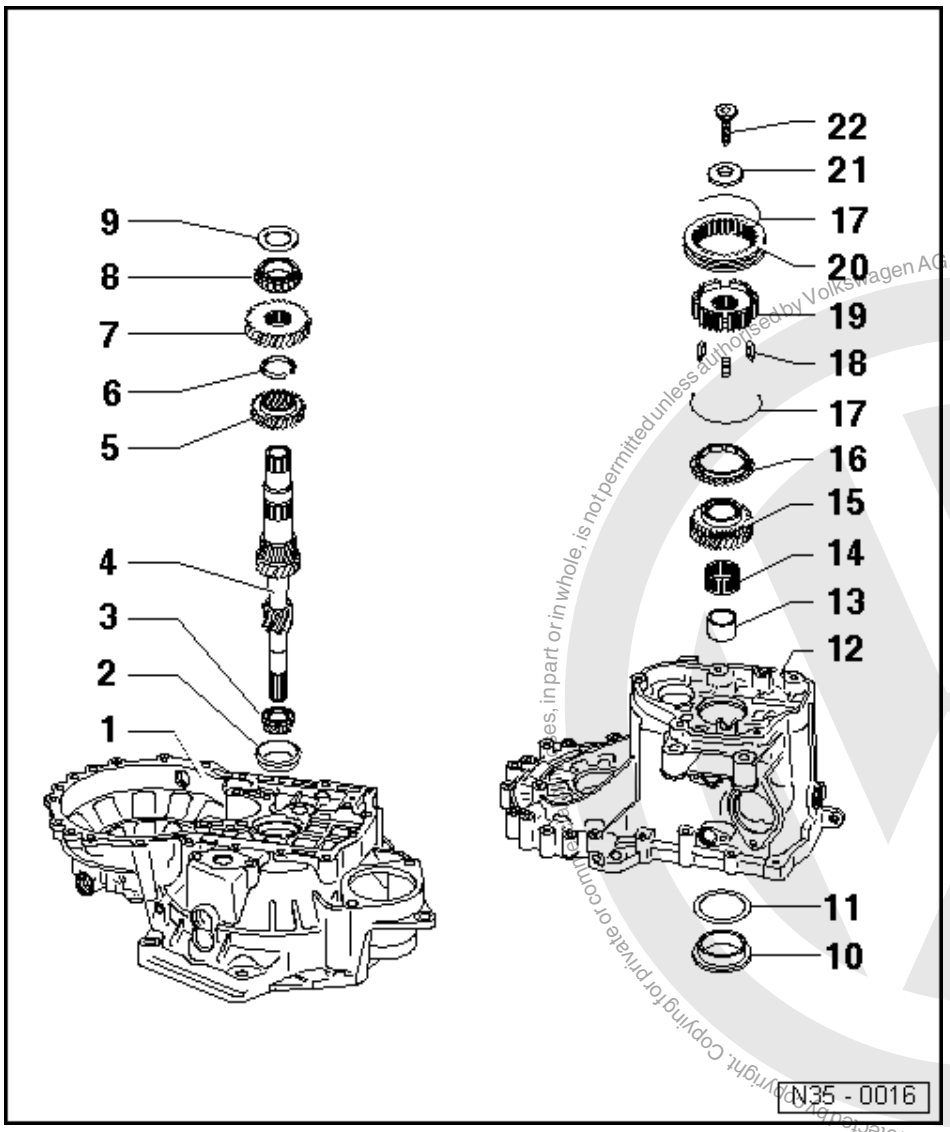

21 Dished washer

- Installation position => Page 95

22 Torx socket head bolt M 10,
80 Nm

- Fitted piece on bolt head locates dished spring => Page 95

Protected by copyright. Copying for private or commercial purposes, in part or in whole, is not permitted unless authorised by Volkswagen AG. Volkswagen AG does not guarantee or accept any liability with respect to the correctness of information in this document. Copyright by Volkswagen AG.
satelettronica

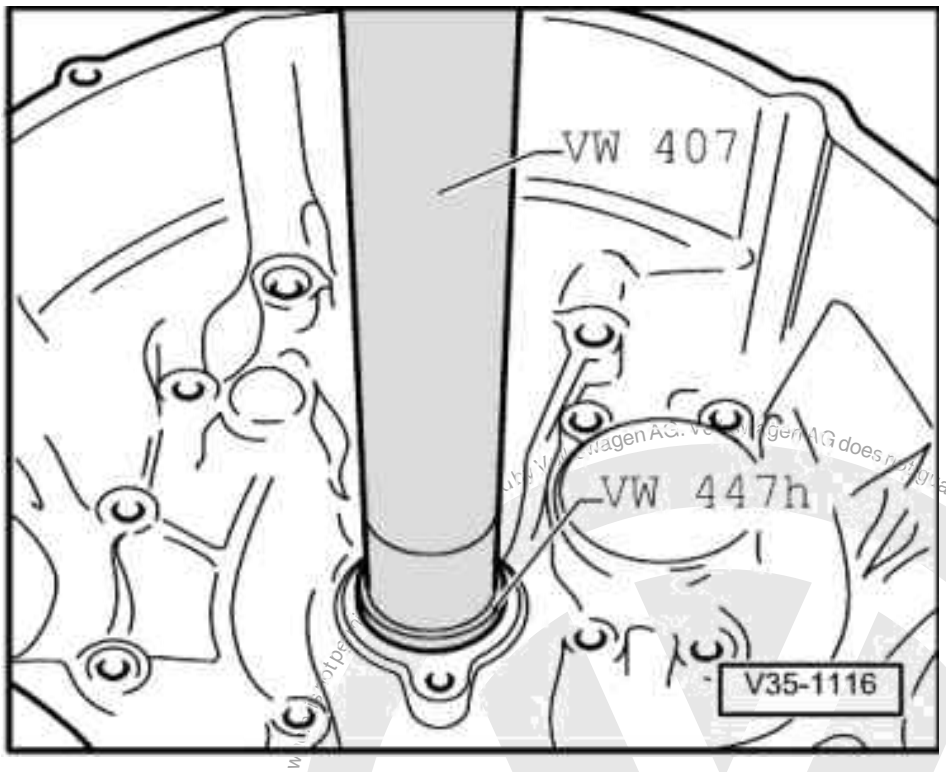

-> Fig.1 Pressing out taper roller bearing outer race

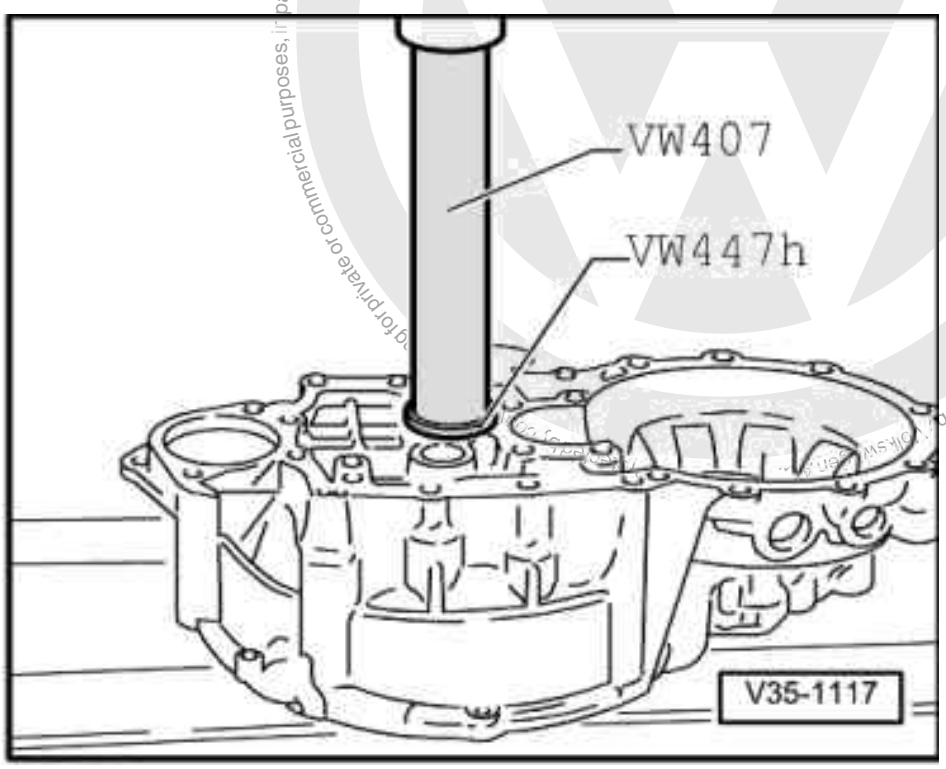

satelettronica

-> Fig.2 Pressing in taper roller bearing outer race

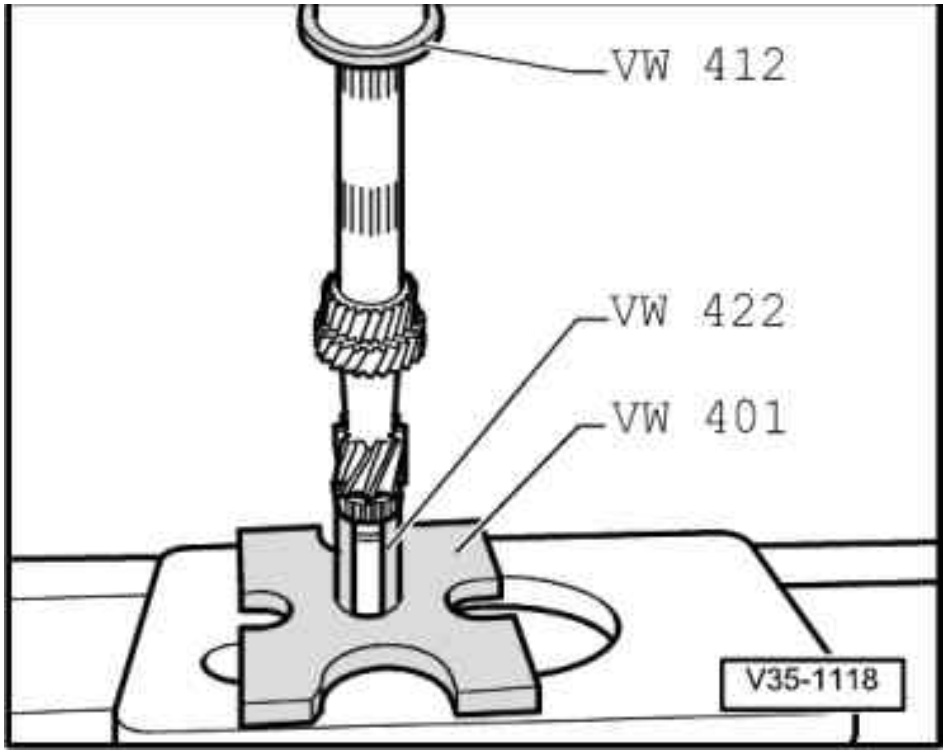

-> Fig.3 Pressing on taper roller bearing inner race

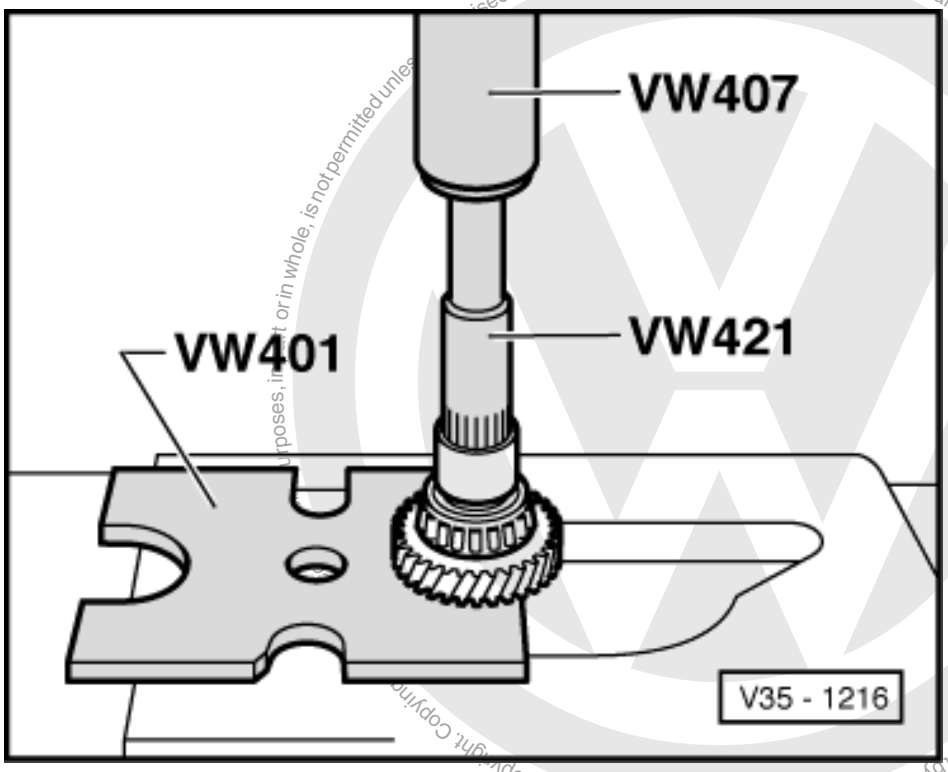

Protected by copyright. Copyright by Volkswagen AG. Volkswagen AG does not guarantee or accept any liability with respect to the correctness of information in this document.
satelettronica

-> Fig.4 Pressing off 4th gear wheel with taper roller bearing and sleeve

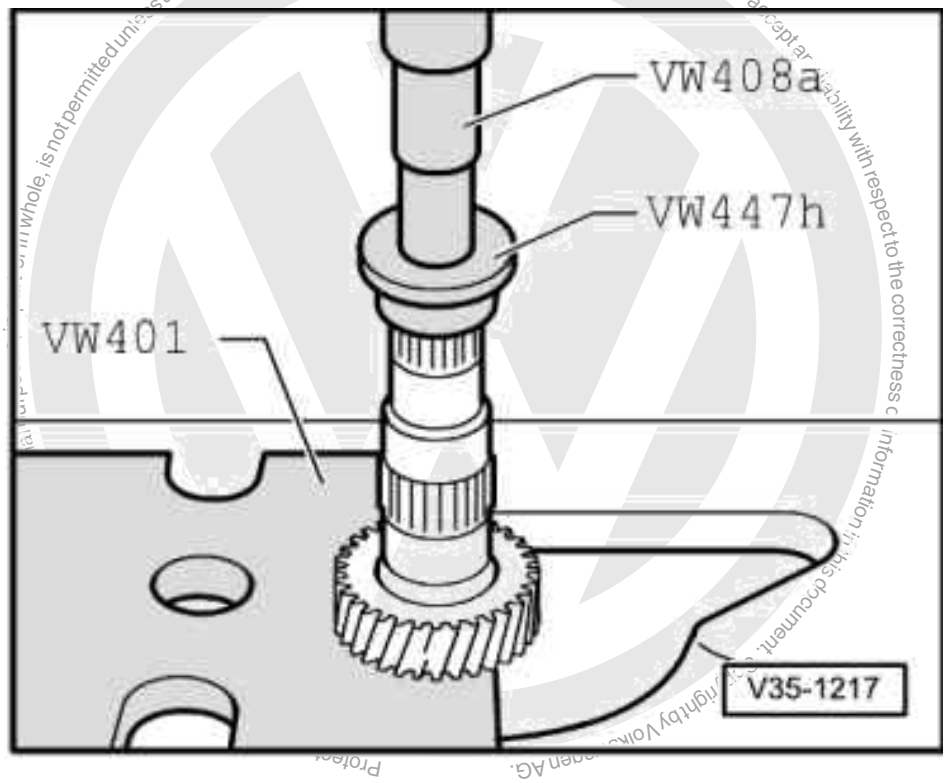

-> Fig.5 Pressing off 3rd gear wheel

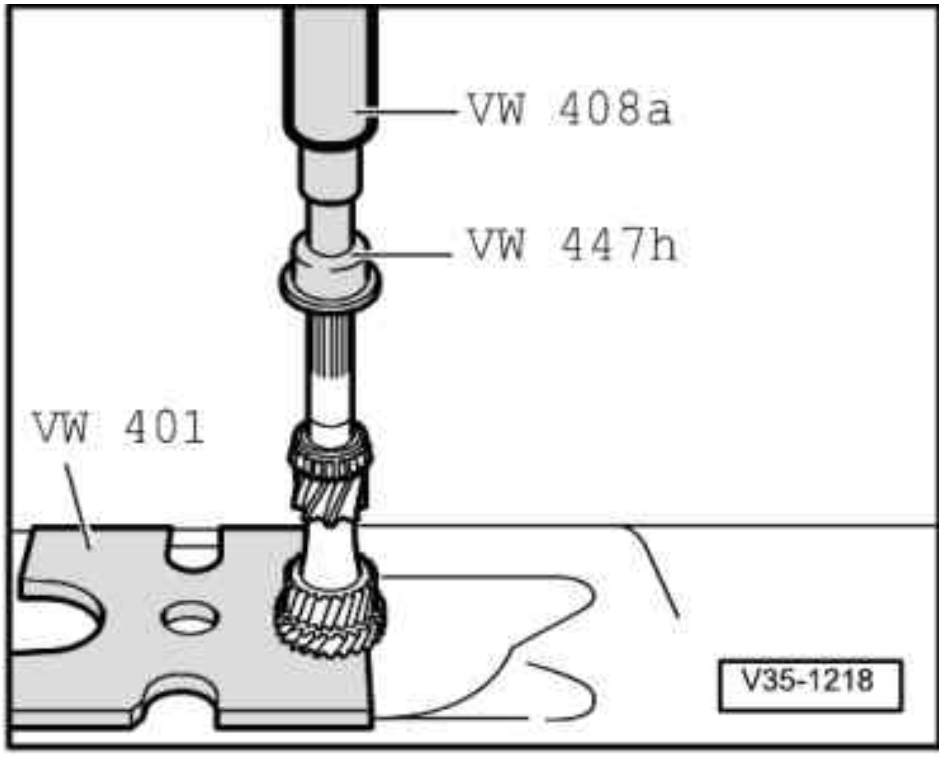

satelettronica

-> Fig.6 Pressing on 3rd gear wheel

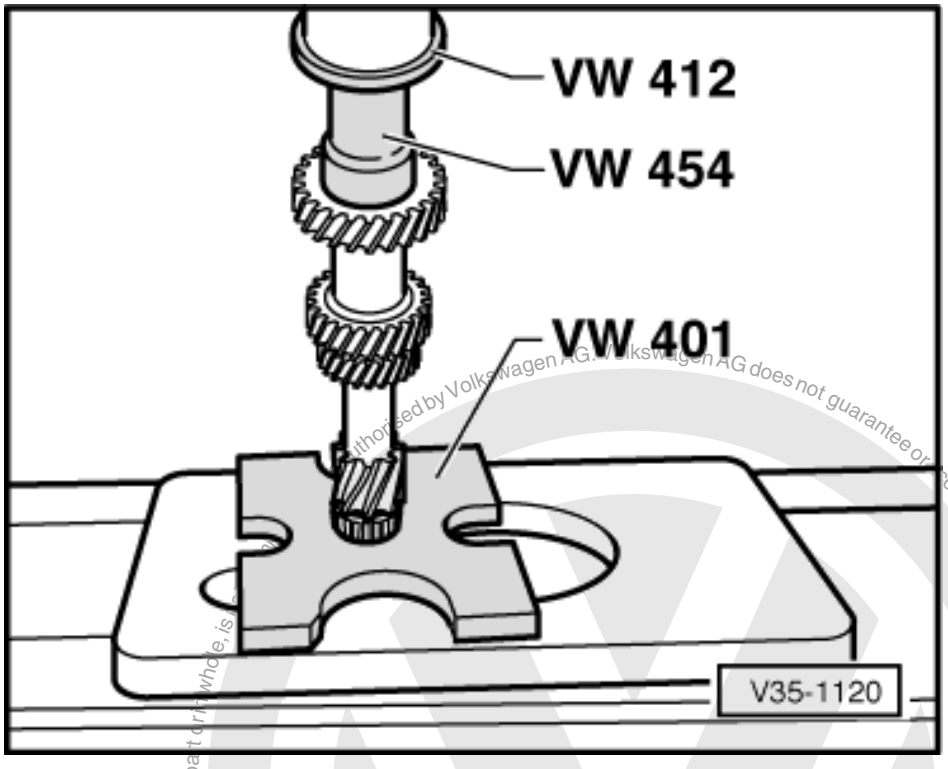

-> Fig.7 Pressing on 4th gear wheel

Shoulder points to 3rd gear.

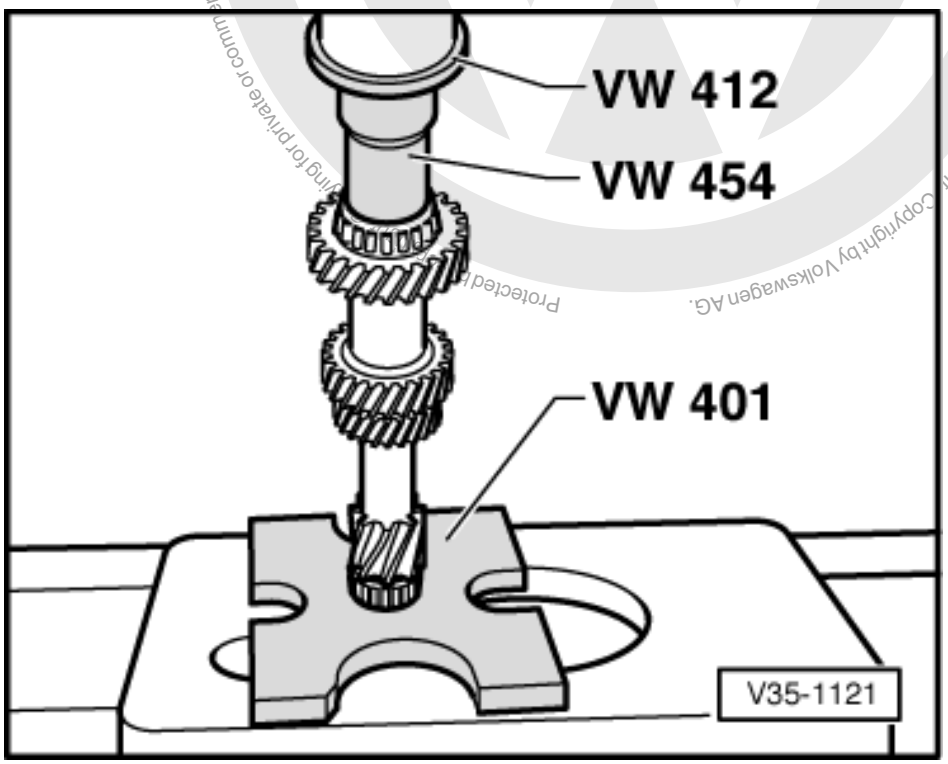

Protected by copyright. Copying for private or commercial purposes, in part or in whole, is not permitted unless authorised by Volkswagen AG. Volkswagen AG does not guarantee or accept any liability with respect to the correctness of information in this document. Copyright by Volkswagen AG.
satelettronica

-> Fig.8 Pressing on taper roller bearing inner race

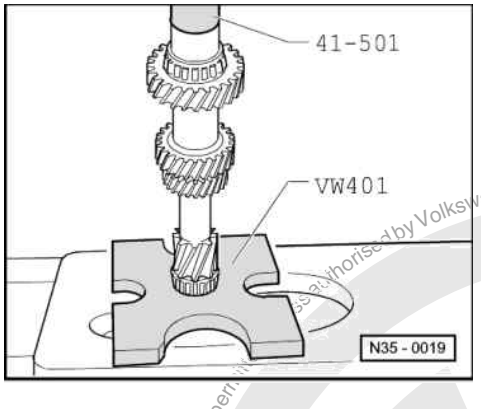

-> Fig.9 Pressing on sleeve for needle roller bearing

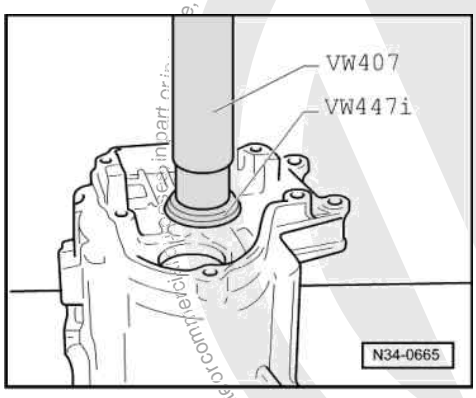

-> Fig.10 Pressing out taper roller bearing outer race

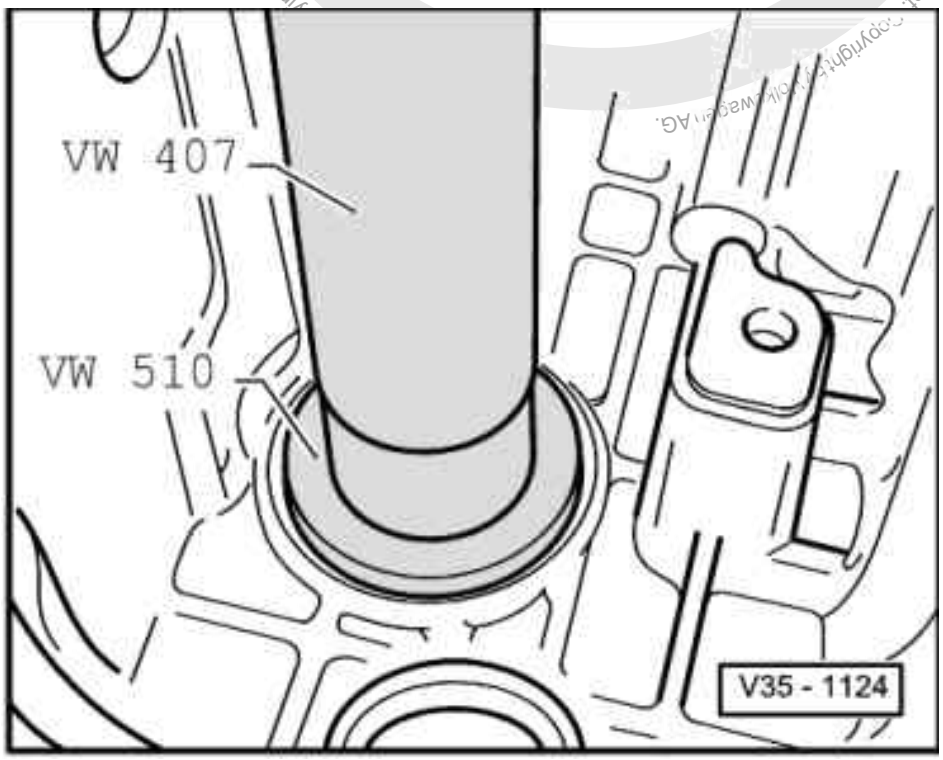

satelettronica

-> Fig.11 Pressing in taper roller bearing outer race

- Install with shim after adjusting input shaft.

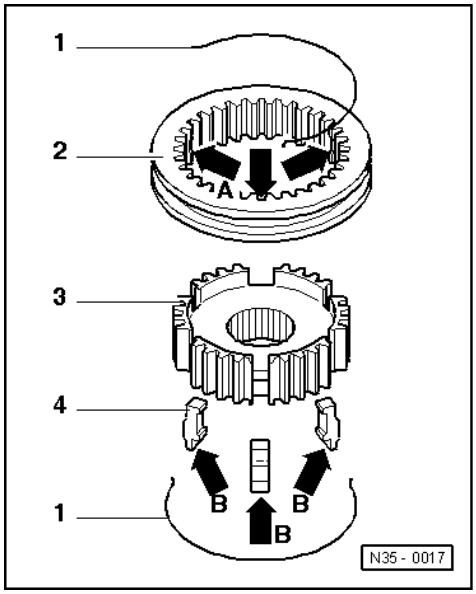

-> Fig.12 5th gear synchronizer

1 - Springs for lock pieces
2 - Locking collar
With 3 recesses (arrows A) for the locking pieces (item 4)
3 - Synchro-hub
4 - Locking pieces
Installation position: The thin extension (arrow B) faces the pointed teeth of the locking collar (item 2)

Protected by copyright. Copying for private or commercial purposes, in part or in whole, is not permitted unless authorised by Volkswagen AG. Volkswagen AG does not guarantee or accept any liability with respect to the correctness of information in this document. Copyright by Volkswagen AG.
satelettronica

-> Fig.13 Assembling 5th gear locking collar/synchro-hub

- Push locking collar over synchro-hub.

Pointed teeth -A- and shoulder -B- of synchro-hub face in same direction. The recesses for the locking pieces in locking collar and synchro-hub must be aligned (Fig. 12).

- Insert locking pieces (Installation position: Fig. 12).
- Insert springs offset by 120° underneath lug -C-. The angled ends of the spring must be directly behind the locking pieces (arrows).

2 - Adjusting input shaft

2.1 - Adjusting input shaft

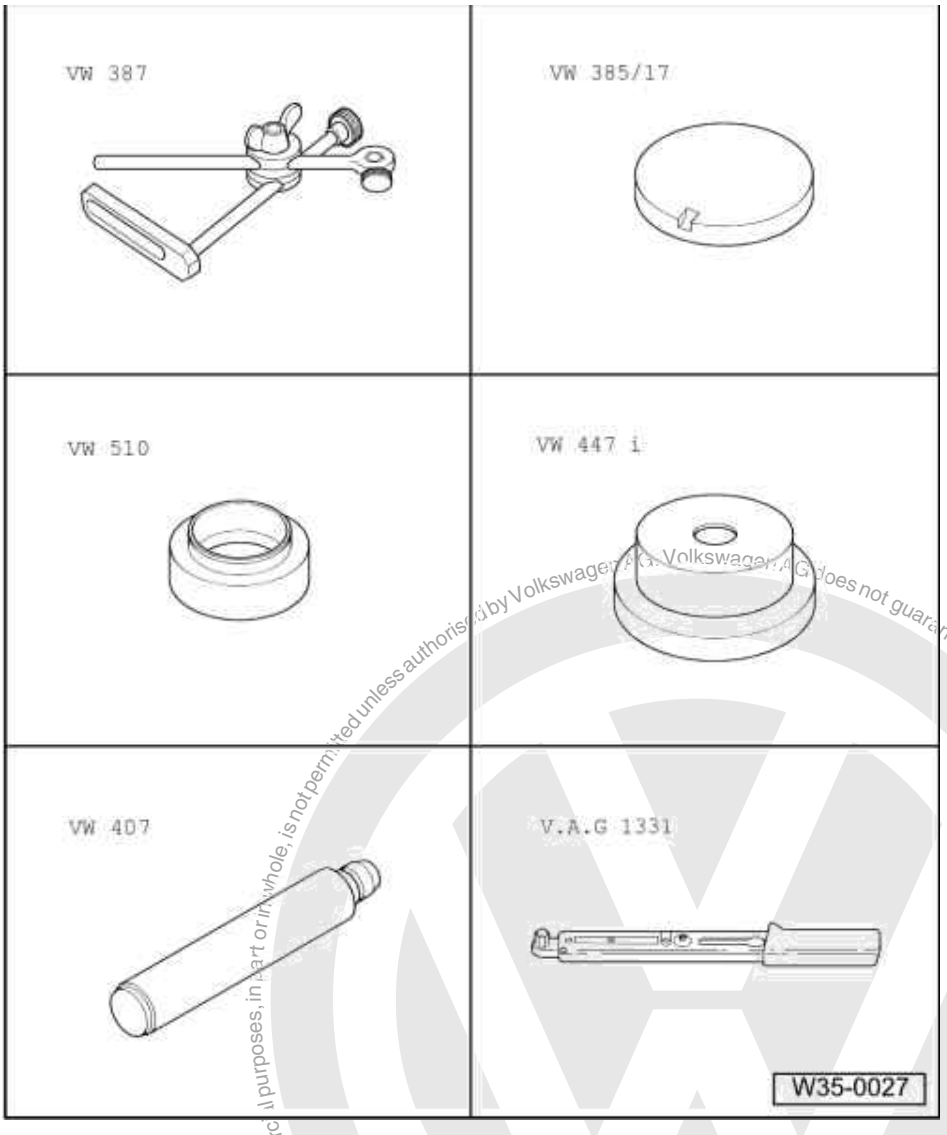

(Determining input shaft adjustment shim)

Special tools and workshop equipment required

- VW 387 Universal dial gauge bracket
- VW 385/17 End measuring plate
- VW 510 Press piece

Protected by copyright. Copying for private or commercial purposes, in part or in whole, is not permitted unless authorised by Volkswagen AG. Volkswagen AG does not guarantee or accept any liability with respect to the correctness of information in this document. Copyright by Volkswagen AG
satelettronica

- VW 447 i Thrust plate
- VW 407 Press tool
- V.A.G 1331 Torque wrench
- Dial gauge

It is only necessary to readjust the input shaft when the following components are renewed:

- Gearbox housing
- Clutch housing
- Input shaft
- 4th gear wheel

or the

- Taper roller bearings

Adjustment overview => Page 195

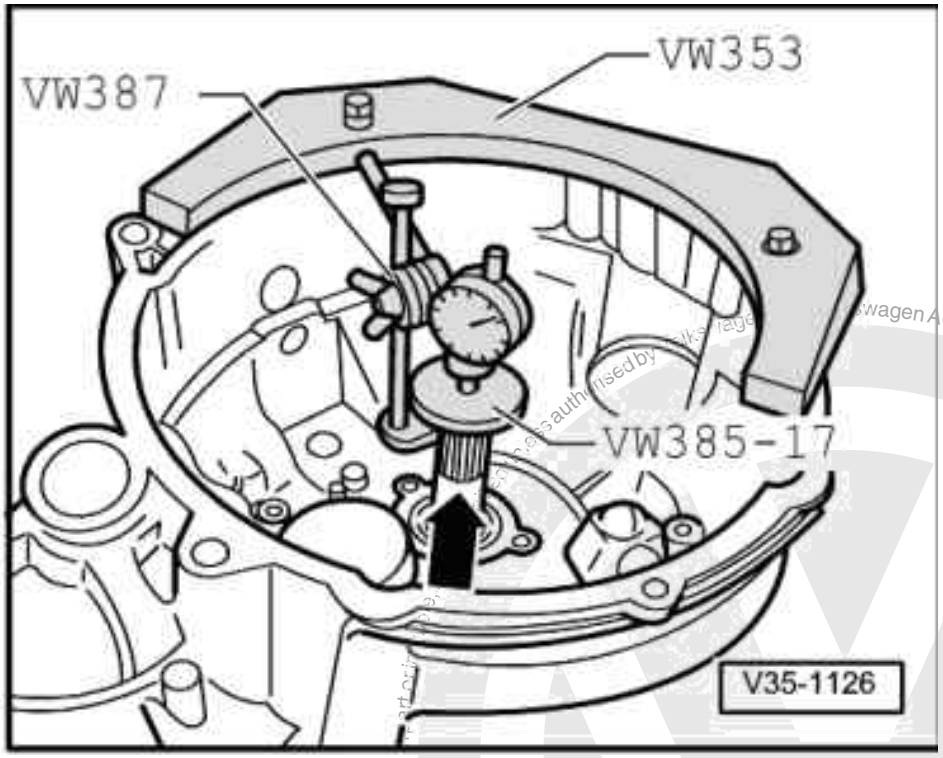

- Press taper roller bearing outer race without shim into gearbox housing onto stop, using VW 510.
- Install input shaft in clutch housing and assemble gearbox housing. Tighten hexagon head bolts to 25 Nm and then turn 90° further.
- -> Fit measuring appliance and D.T.I. in clutch housing (large taper roller bearing in gearbox housing).
- Before taking any measurements, rotate input shaft to allow bearings to settle. Set dial gauge to "O" with 1 mm preload.

satelettronica
Protected by copyright. Copying for private or commercial purposes, in part or in whole, is not permitted unless authorised by Volkswagen AG. Volkswagen AG does not guarantee or accept any liability with respect to the correctness of information in this document. Copyright by Volkswagen AG.

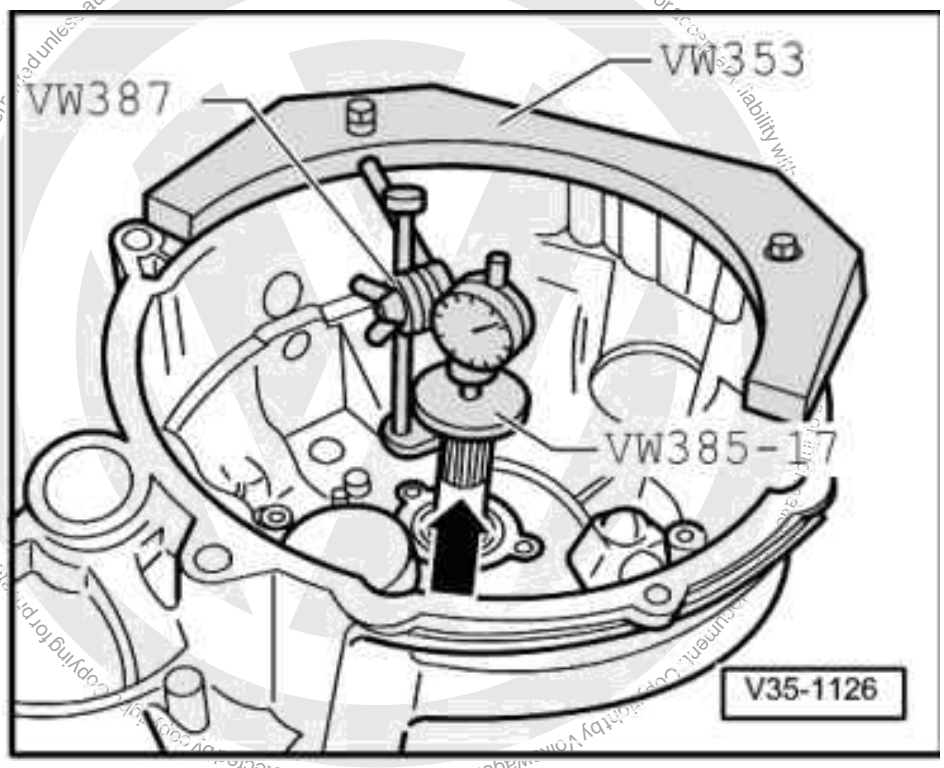

Note:

This preparation is to be repeated for each subsequent measurement, otherwise the gauge will not return to the starting position.

- -> Press input shaft in direction of D.T.I. (arrow).
- Read off and note clearance indicated on D.T.I. (example 1.21).

Note:

D.T.I. does not return to original position.

- Determine thickness of shim from table => Page 135 (example 1.175).

- Remove input shaft and press taper roller bearing outer race out of gearbox housing using VW 447i .
- Press taper roller bearing outer race together with the 1.175 shim into gearbox housing using VW 510.
- Assemble gearbox housing and tighten hexagon head bolts to 25 Nm and then turn 90° further.

2.2 - Table of adjustment shims

Measured	Shim	
bearing clearance (mm)	Thickness (mm)	Part No.
0.671 ... 0.699	0.650	02A 311 140
0.700 ... 0.724	0.675	02A 311 140 A
0.725 ... 0.749	0.700	02A 311 140 B
0.750 ... 0.744	0.725	02A 311 140 C
0.775 ... 0.799	0.750	02A 311 140 D
0.800 ... 0.824	0.775	02A 311 140 E
0.825 ... 0.849	0.800	02A 311 140 F
0.850 ....0.874	0.825	02A 311 140 G
0.875 ... 0.899	0.850	02A 311 140 H

satelettronica

Measured	Shim	
0.900 ... 0.924	0.875	02A 311 140 J
0.925 ... 0.949	0.900	02A 311 140 K
0.950 ... 0.974	0.925	02A 311 140 L
0.975 ... 0.999	0.950	02A 311 140 M
1.000 ... 1.024	0.975	02A 311 140 N
1.025 ... 1.049	1.000	02A 311 140 P
1.050 ... 1.074	1.025	02A 311 140 Q
1.075 ... 1.099	1.050	02A 311 140 R
1.100 ... 1.124	1.075	02A 311 140 S
1.125 ... 1.149	1.100	02A 311 140 T
1.150 ... 1.174	1.125	02A 311 140 AA
1.175 ... 1.199	1.150	02A 311 140 AB

Measured	Shim	
bearing clearance (mm)	Thickness (mm)	Part No.
1.200 ... 1.224	1.175	02A 311 140 AC
1.225 ... 1.249	1.200	02A 311 140 AD
1.250 ... 1.274	1.225	02A 311 140 AE
1.275 ... 1.229	1.250	02A 311 140 AF
1.300 ... 1.324	1.275	02A 311 140 AG
1.325 ... 1.349	1.300	02A 311 140 02A 311 140
1.350 ... 1.374	1.325	02A 311 140 02A 311 140 A
1.375 ... 1.399	1.350	02A 311 140 A 02A 311 140 A
1.400 ... 1.424	1.375	02A 311 140 A 02A 311 140 B
1.425 ... 1.449	1.400	02A 311 140 B 02A 311 140 B
1.450 ... 1.474	1.425	02A 311 140 B 02A 311 140 C
1.475 ... 1.499	1.450	02A 311 140 C 02A 311 140 C
1.500 ... 1.524	1.475	02A 311 140 C 02A 311 140 D

Measured	Shim	
bearing clearance (mm)	Thickness (mm)	Part No.
1.525 ... 1.549	1.500	02A 311 140 D 02A 311 140 D
1.550 ... 1.574	1.525	02A 311 140 D 02A 311 140 E
1.575 ... 1.599	1.550	02A 311 140 E 02A 311 140 E
1.600 ... 1.624	1.575	02A 311 140 E 02A 311 140 F
1.625 ... 1.649	1.600	02A 311 140 F 02A 311 140 F
1.650 ... 1.674	1.625	02A 311 140 F 02A 311 140 G
1.675 ... 1.699	1.650	02A 311 140 G 02A 311 140 G
1.700 ... 1.724	1.675	02A 311 140 G 02A 311 140 H
1.725 ... 1.749	1.700	02A 311 140 H 02A 311 140 H

Protected by copyright. Copyright by Volkswagen AG. Volkswagen AG does not guarantee or accept any liability with respect to the correctness of information in this document. Copyright by Volkswagen AG. Reproduction in part or in whole is permitted under authorization only for private or commercial purposes.
satelettronica

Measured	Shim	
1.750 ... 1.774	1.725	02A 311 140 H 02A 311 140 J
1.775 ... 1.791	1.750	02A 311 140 J 02A 311 140 J

2.3 - Performing measurement check

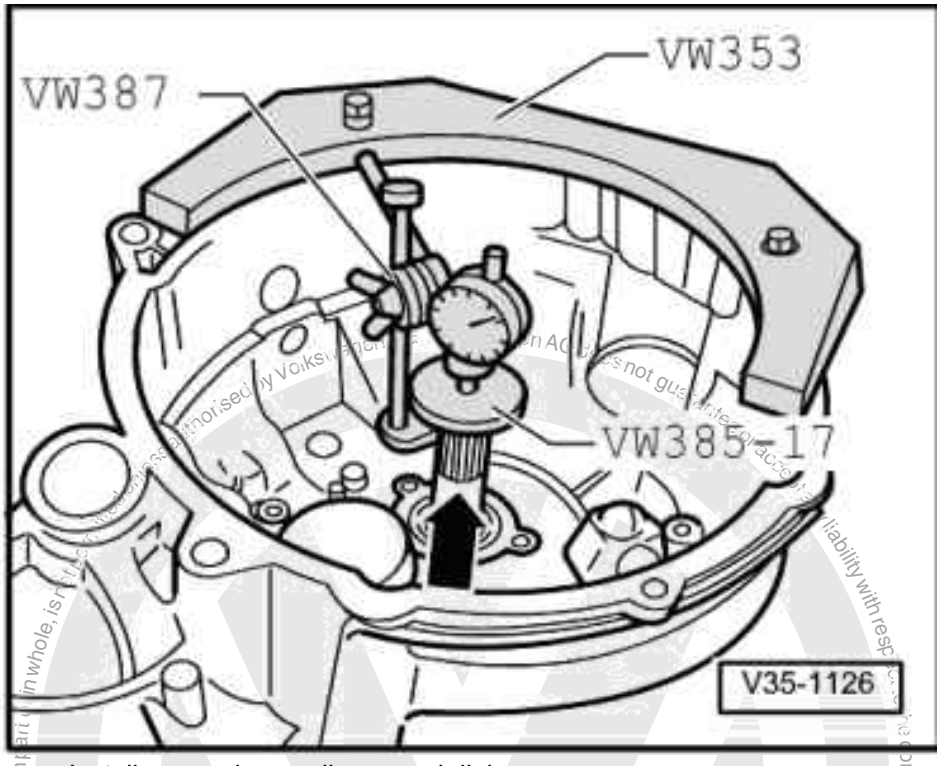

- -> Install measuring appliance and dial gauge
- Rotate input shaft so that the taper roller bearings settle.
- Press input shaft in direction of arrow.
- Bearing play should be min. 0.01 ... max. 0.09 mm.

Note:

If the bearing clearance cannot be measured, but input shaft play is perceptible and the input shaft turns freely, the adjustment is acceptable.

satelettronica

3 - Dismantling and assembling output shaft

3.1 - Dismantling and assembling output shaft

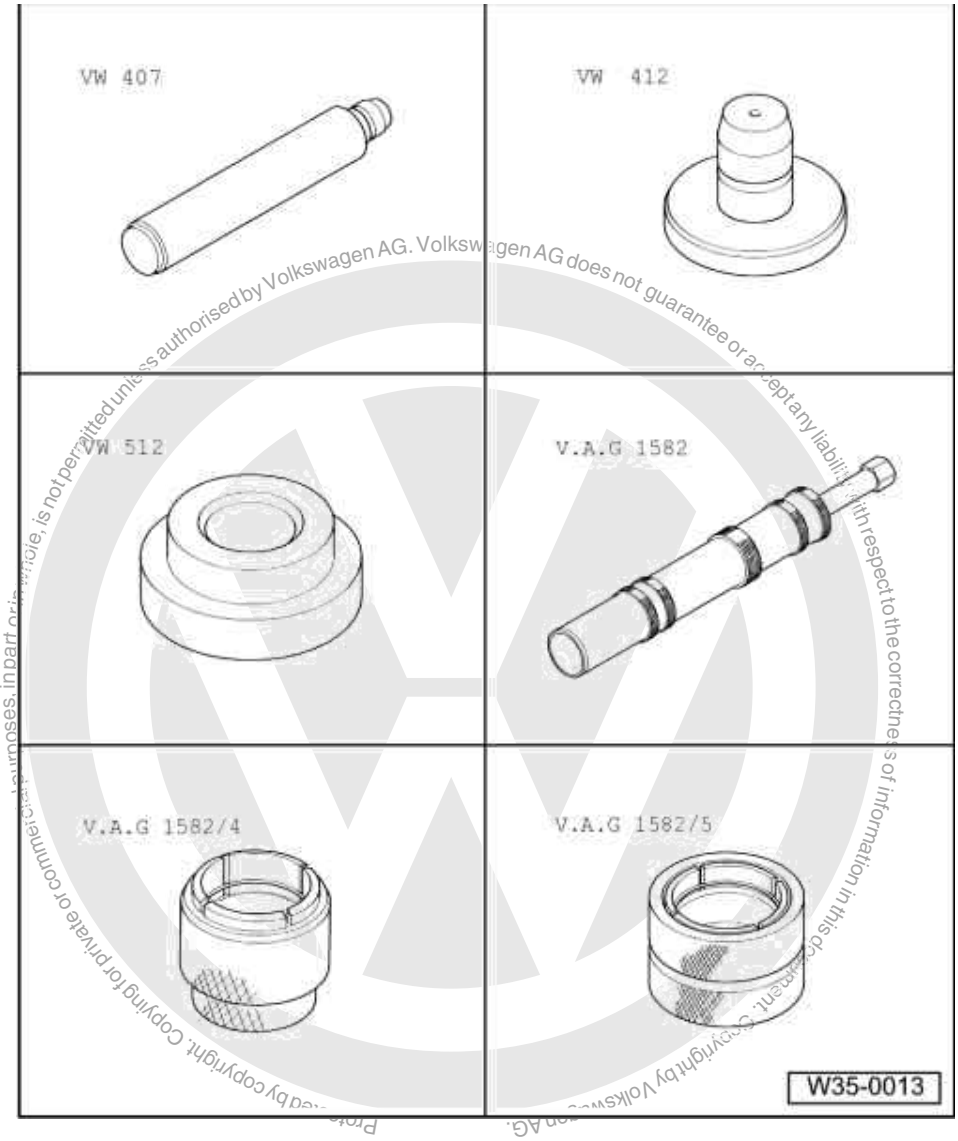

Special tools and workshop equipment required

- VW 407 Press tool
- VW 412 Press tool
- VW 512 Press disk
- V.A.G 1582 Puller
- V.A.G 1582/4 Grip piece
- V.A.G 1582/5 Grip piece

satelettronica

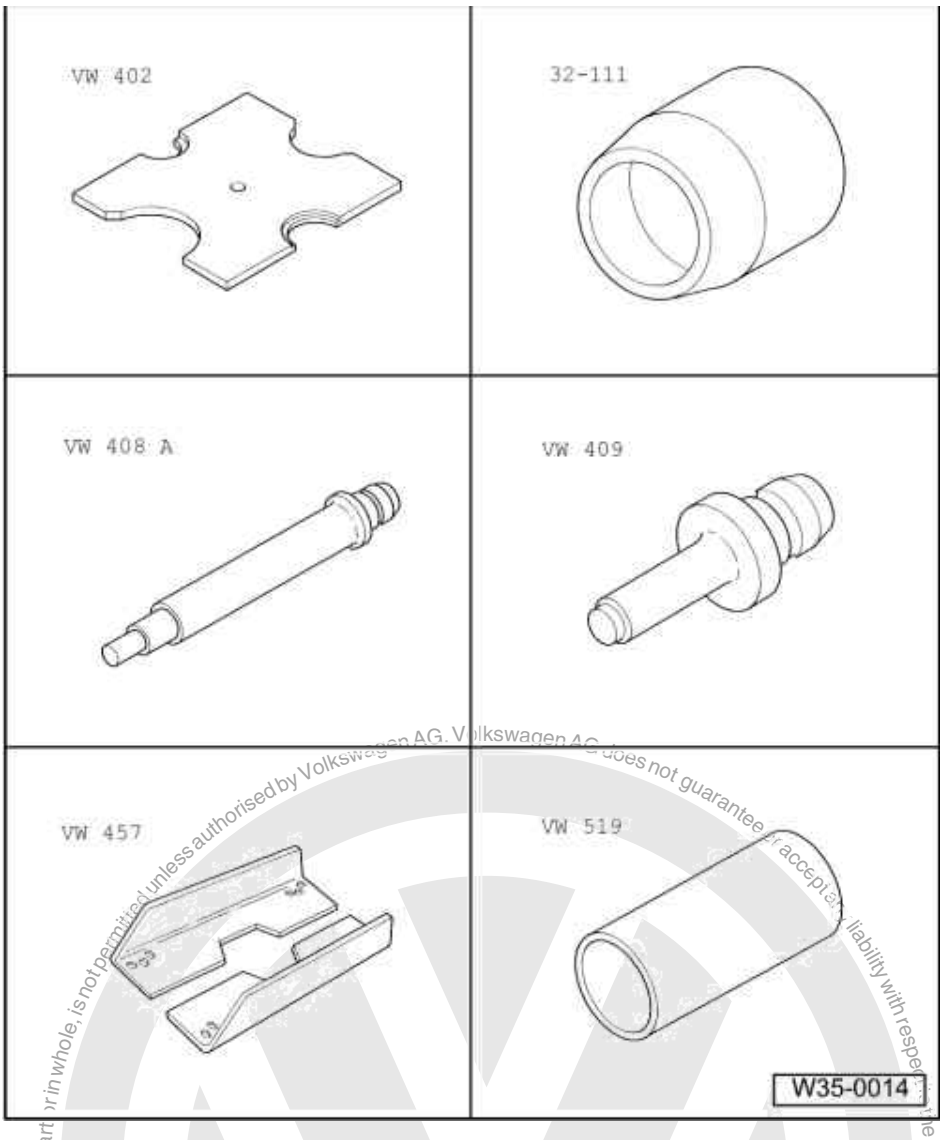

Special tools and workshop equipment required

- VW 402 Thrust plate
- 32-111 Thrust piece
- VW 408 A Press tool
- VW 407 Press tool
- VW 457 Support rails
- VW 519 Tube

Protected by copyright. Copying for private or commercial purposes, in part or in whole, is not permitted unless authorised by Volkswagen AG. Volkswagen AG does not guarantee or accept any liability with respect to the correctness of information in this document. Copyright by Volkswagen AG.
satelettronica

Protected by copyright. Copying for private or commercial purposes, in part or in whole, is not permitted unless authorised by Volkswagen AG. Volkswagen AG does not guarantee or accept any liability with respect to the correctness of information in this document. Copyright by Volkswagen AG.

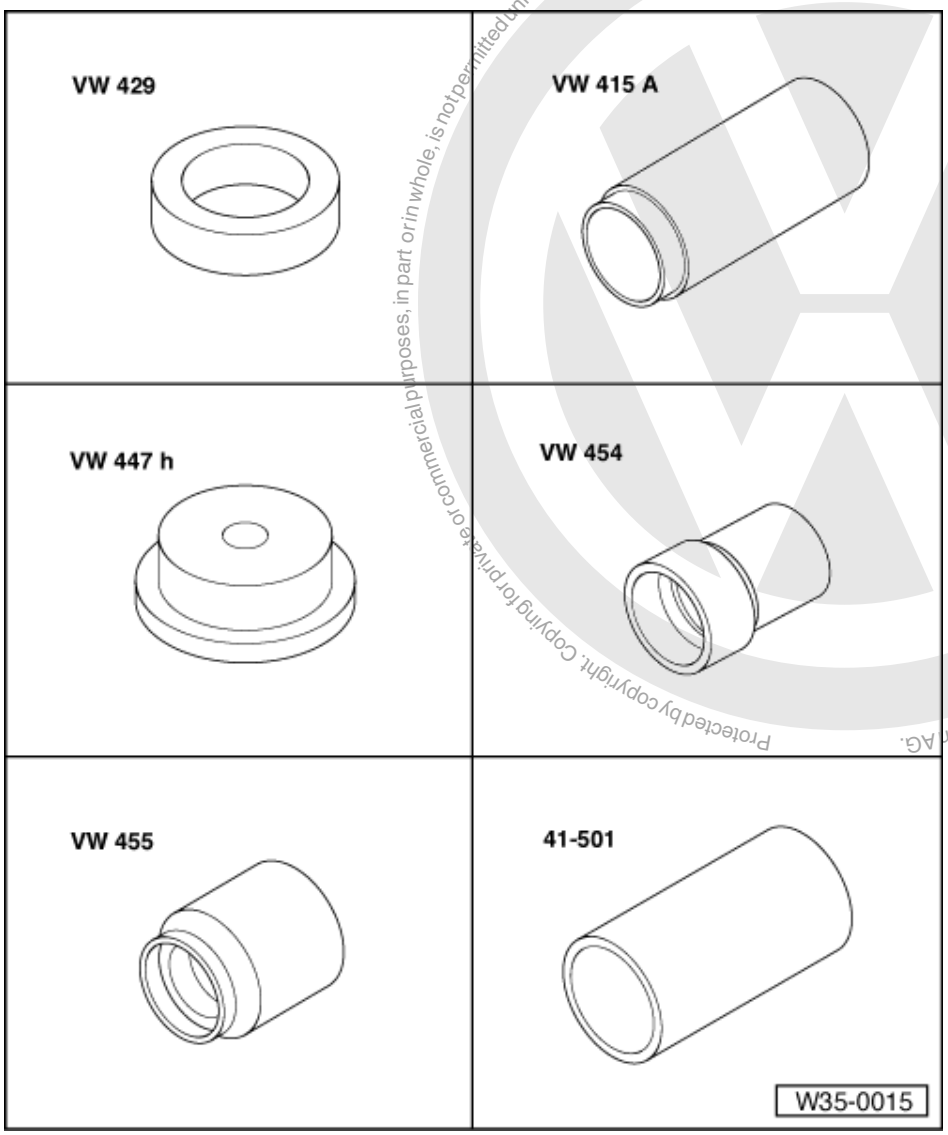

Special tools and workshop equipment required

- VW 429 Thrust ring
- VW 415 A Tube
- VW 447 H Press plate
- VW 454 Press piece
- VW 455 Fitting sleeve
- 41-501 Drift sleeve

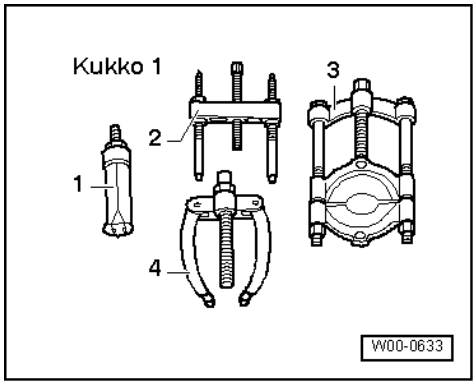

satelettronica

Special tools and workshop equipment required

- 1 - Internal puller Kukko 21/6
- 4 - Kukko 22/2 Counter support

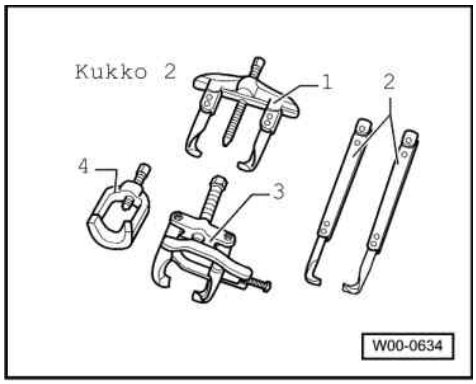

- 1 - Two-arm puller Kukko 20/10

With 250 mm long hooks

Protected by copyright. Copyright by Volkswagen AG.
Copyright by Volkswagen AG. Volkswagen AG does not guarantee or accept any liability with respect to the correctness of information in this document. Copying for private or commercial purposes, in part or in whole, is not permitted unless authorised by Volkswagen AG.
satelettronica

Notes:

- The output shaft is dismantled as follows:
  - Position separating device under 2nd gear wheel (item 19) and press off as described in Fig. 5.
  - Remove circlip (item 15).
  - Position two-arm puller under bearing support (item 9) and pull off locking collar with 1st and 2nd gear synchro-hub as described in Fig. 6 .
- When installing new gears or a new output shaft consult technical data =>Page 2 .
- Both taper roller bearings must be renewed together as a set.

1 Hexagon nut, 25 Nm and then turn 90°further
- 4 nuts for bearing support

2 Clutch housing

3 Shim
- For output shaft
- Adjustment overview => Page 195

4 Small taper roller bearing outer race
- Removing => Fig. 1
- Pressing in => Fig. 2

5 Small taper roller bearing inner race
- Pulling off => Fig. 3
- Pressing on => Fig. 4

Protected by copyright. Copying for private or commercial purposes, in part or in whole, is not permitted unless authorised by Volkswagen AG. Volkswagen AG does not guarantee or accept any liability with respect to the correctness of information in this document. Copyright by Volkswagen AG.
satelettronica

6 Output shaft
- Is paired with final drive gear, always renew together as a set
- Adjusting => Page 168

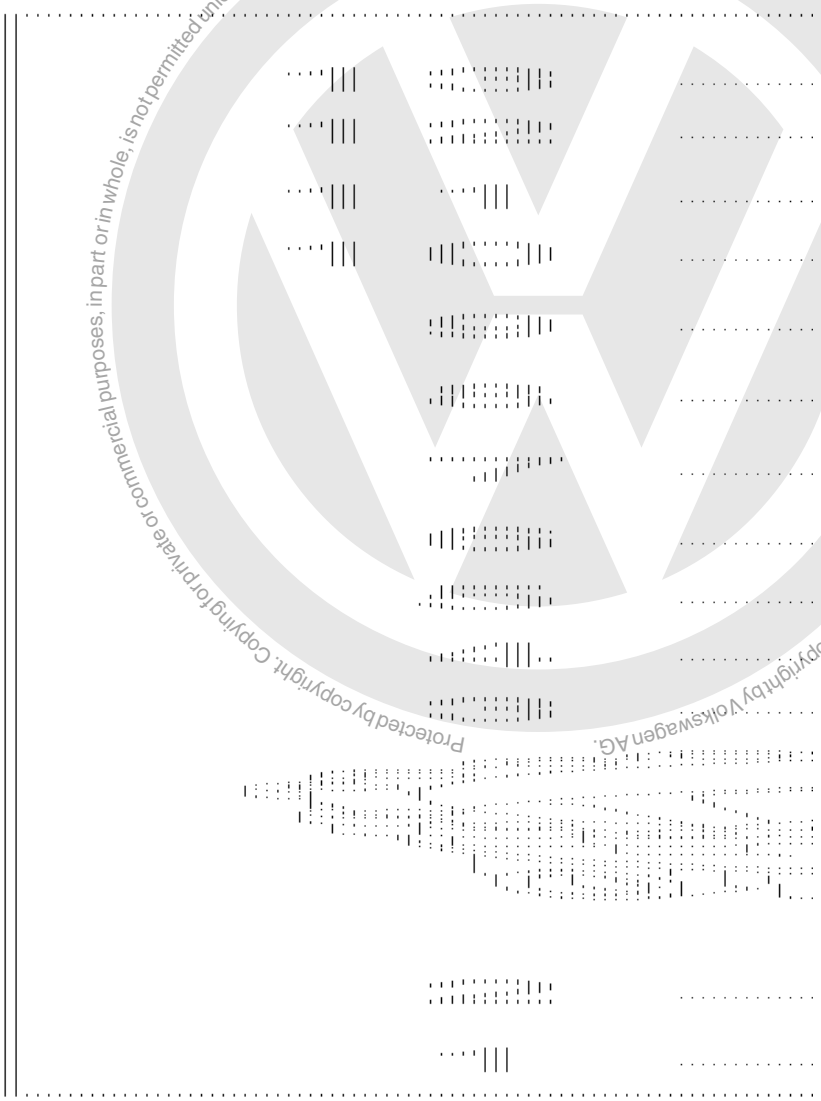

7 Large taper roller bearing inner race
- Pulling off => Fig. 7
- Pressing on => Fig. 8

8 Sealing ring
- Place sealing rings (Qty. 4) on the bearing support bolts

9 Bearing support
- With large taper roller bearing outer race and bolts
- Only change outer race together with large taper roller bearing and bearing support

10 Thrust washer
- Shoulder on thrust washer faces taper roller bearing

11 1st selector gear

Protected by copyright. Copyright by Volkswagen AG. Volkswagen AG does not guarantee or accept any liability with respect to the correctness of information in this document. Copying for private or commercial purposes, in part or in whole, is not permitted unless authorised by Volkswagen AG.

satelettronica

Protected by copyright. Copyright for private or commercial purposes, in part or in whole, is not permitted unless authorised by Volkswagen AG. Volkswagen AG does not guarantee or accept any liability with respect to the correctness of information in this document. Copyright by Volkswagen AG.

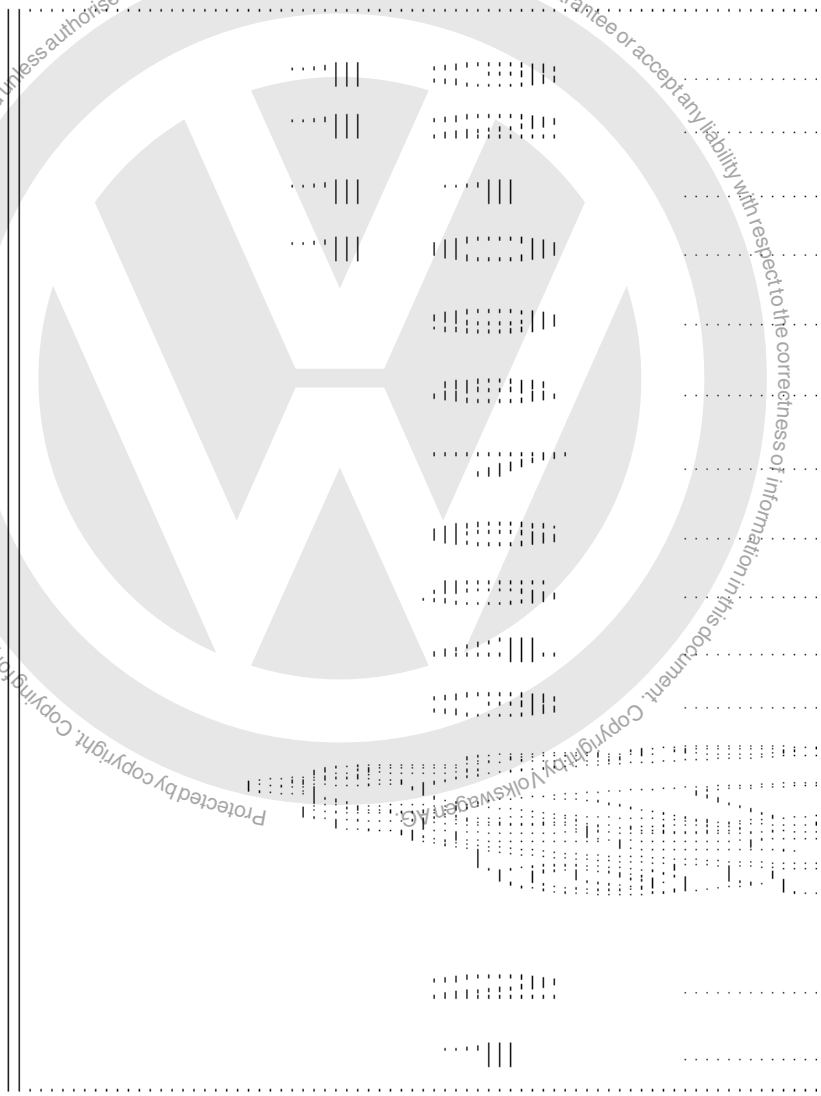

12 Needle roller bearing

- For 1st gear

13 1st gear synchro-ring

- Checking for wear
  => Fig. 9
- Identification => Fig. 14
- From gearbox build date 04 09 0 the synchronisation for the 1st gear has been modified =>Page 164

14 1st and 2nd gear locking collar with synchro-hub

- Pull off with bearing support after removing the circlip (item 15)
  => Fig. 6
- Dismantling => Fig. 10
- Assembling locking collar/synchro hub => Fig. 10 and Fig. 11
- Installation position => Fig. 12
- Pressing on => Fig. 13
- From gearbox build date 04 09 0 the synchronisation for the 1st gear has been modified =>Page 164

satelettronica

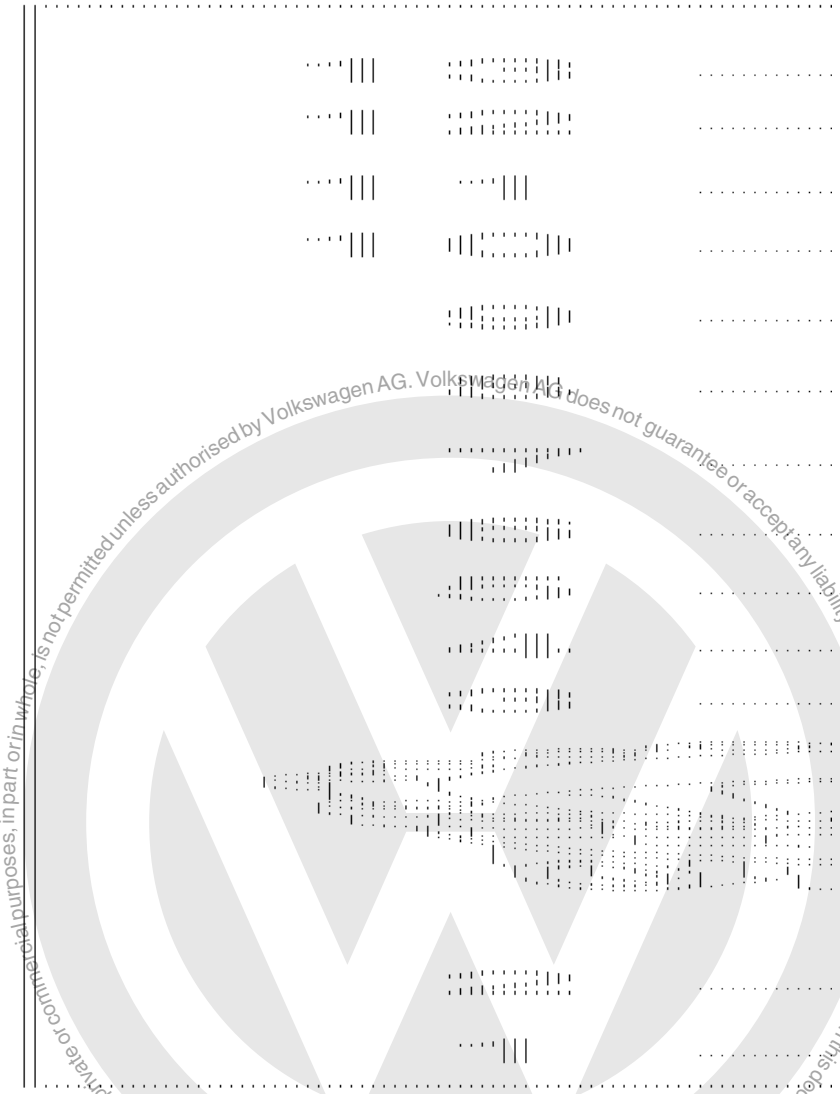

Protected by copyright. Copying for private or commercial purposes, in part or in whole, is not permitted unless authorised by Volkswagen AG. Volkswagen AG does not guarantee or accept any liability with respect to the correctness of information in this document. Copyright by Volkswagen AG.

15 Securing clip

16 2nd gear synchro-ring

- Identification => Fig. 14
- Checking for wear
  => Fig. 16
- Assemble so that the recesses locate in the locking collar (item 14) locking pieces

17 Outer ring

- Insert in the synchro-ring (item 16). Installation position => Fig. 17
- Renew if scored

18 Synchro-ring

- (Inner ring)
- Checking for wear
  => Fig. 18
- Check lugs for scoring
- Installation position => Fig. 19

satelettronica

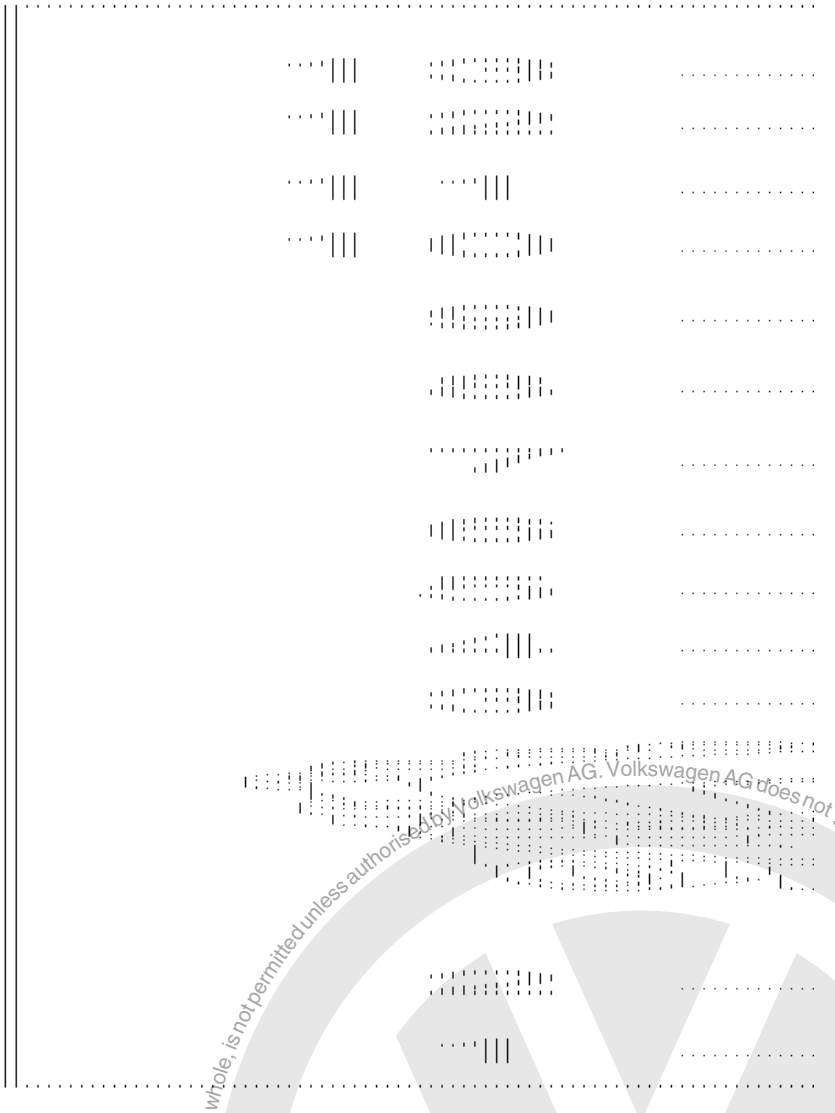

19 2nd gear
- Installation position => Fig. 20

20 Needle roller bearing
- For 2nd gear

21 Thrust washer

22 Sleeve for 3rd gear needle roller bearing
- Pressing off with 2nd gear wheel => Fig. 5
- Pressing on => Fig. 21

23 Needle roller bearing
- For 3rd gear

24 Selector gear for 3rd gear

25 3rd gear synchro-ring
- Checking for wear => Fig. 9

Protected by copyright. Copying for private or commercial purposes, in part or in whole, is not permitted unless authorised by Volkswagen AG. Volkswagen AG does not guarantee or accept any liability with respect to the correctness of information in this document. Copyright by Volkswagen AG.

satelettronica

26 Locking collar with 3rd and 4th gear synchro-hub

- Press off with 2nd gear wheel (item 19) and 3rd gear wheel (item 24) => Fig. 5
- Dismantling => Fig. 22
- Installation position locking collar/synchro-hub => fig. 24
- Assembling locking collar/synchro-hub => Fig. 22 and Fig. 23
- Pressing on => Fig. 25

27 Sleeve

- For needle roller bearing
- Press off with locking collar and 3rd and 4th gear synchro-hub (item 26) => Fig. 5
- Pressing on => Fig. 26

28 Needle roller bearing

- For 4th gear

Protected by copyright. Copying for private or commercial purposes, in part or in whole, is not permitted unless authorised by Volkswagen AG. Volkswagen AG does not guarantee or accept any liability with respect to the correctness of information in this document. Copyright by Volkswagen AG.

satelettronica

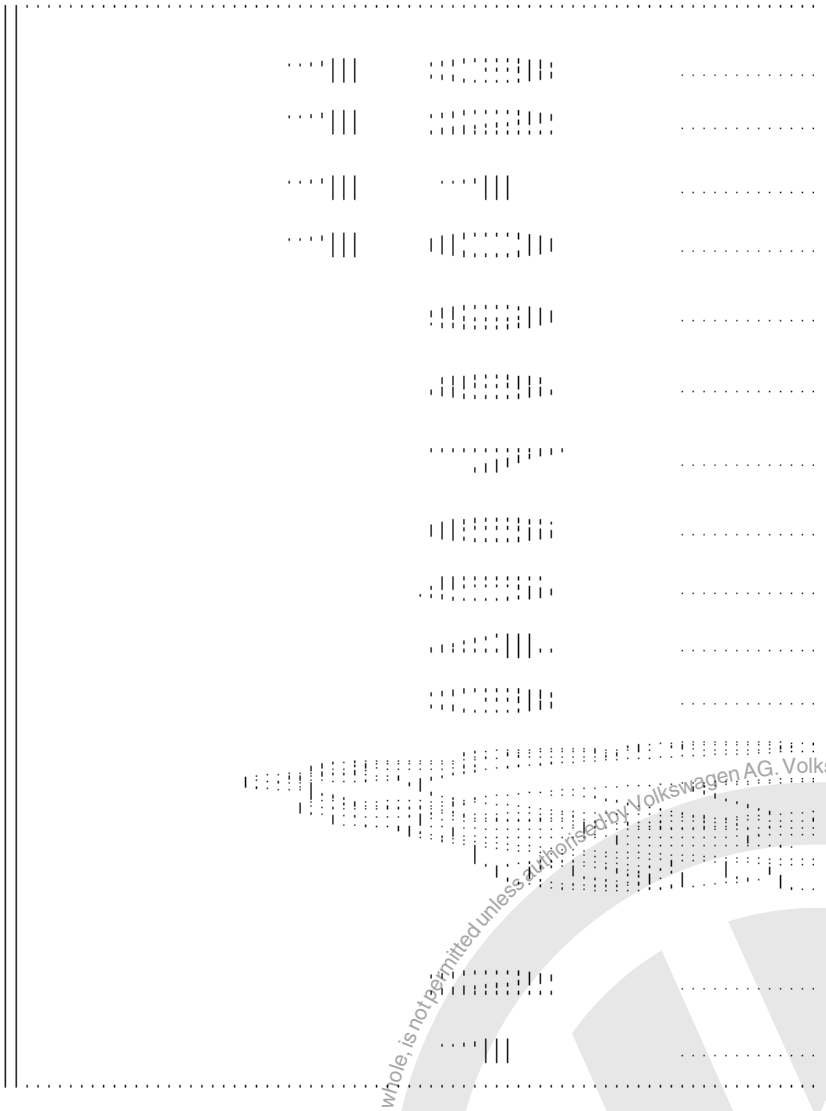

29 4th gear synchro-ring
- Checking for wear
  => Fig. 9

30 Selector gear for 4th gear

31 Thrust washer

32 Needle roller bearing
- For output shaft
- Removing and installing
  => Page 104

33 Gearbox housing

34 Sleeve
- For output shaft needle roller bearing
- Pressing off => Fig. 5
- Pressing on => Fig. 27

35 5th gear
- Removing and installing
  => Page 79

Protected by copyright. Copying for private or commercial purposes, in part or in whole, is not permitted unless authorised by Volkswagen AG. Volkswagen AG does not guarantee or accept any liability with respect to the correctness of information in this document. Copyright by Volkswagen AG.
satelettronica

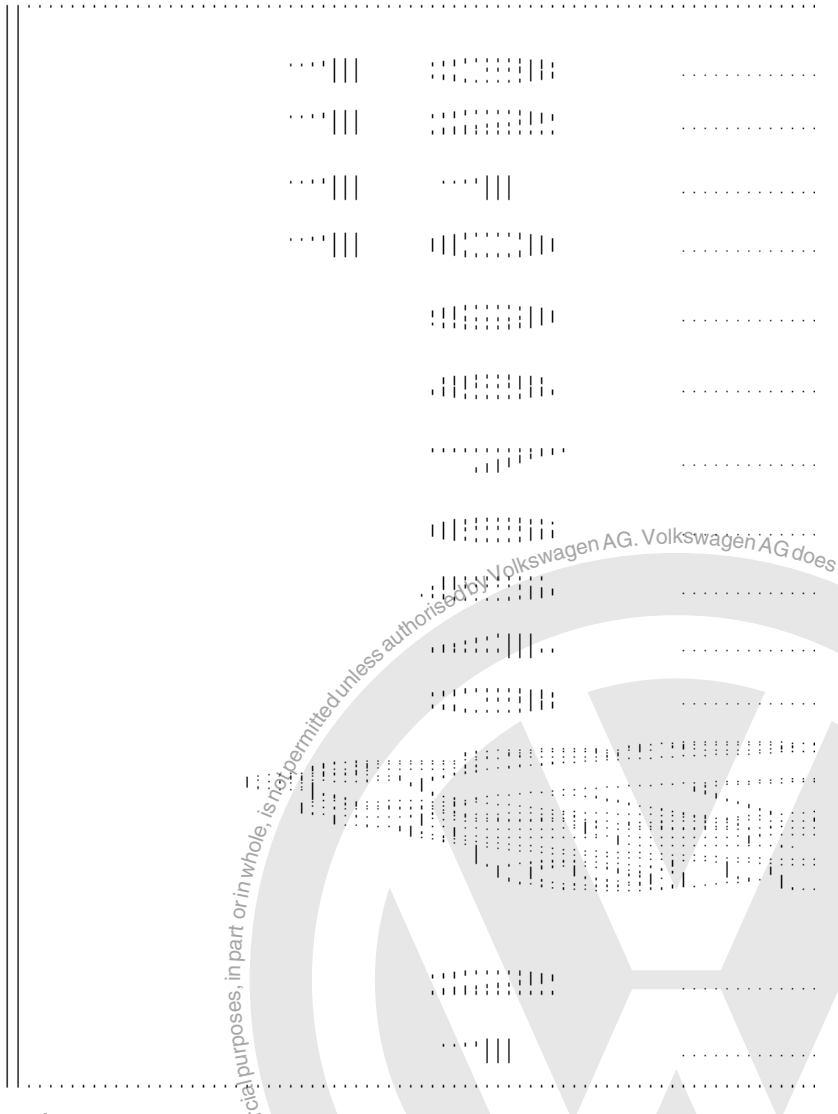

36 Dished spring

- Installation position => Page 95

37 Torx socket head bolt M10, 80 Nm

- Fitted portion on bolt head holds saucer spring washer in position

Protected by copyright. Copying for private or commercial purposes, in part or in whole, is not permitted unless authorised by Volkswagen AG. Volkswagen AG does not guarantee or accept any liability with respect to the correctness of information in this document. Copyright by Volkswagen AG.
satelettronica

Protected by copyright. Copyright by Volkswagen AG. Volkswagen AG does not guarantee or accept any liability with respect to the correctness of information in this document. Copyright by Volkswagen AG. permitted unless authorised by Volkswagen AG.

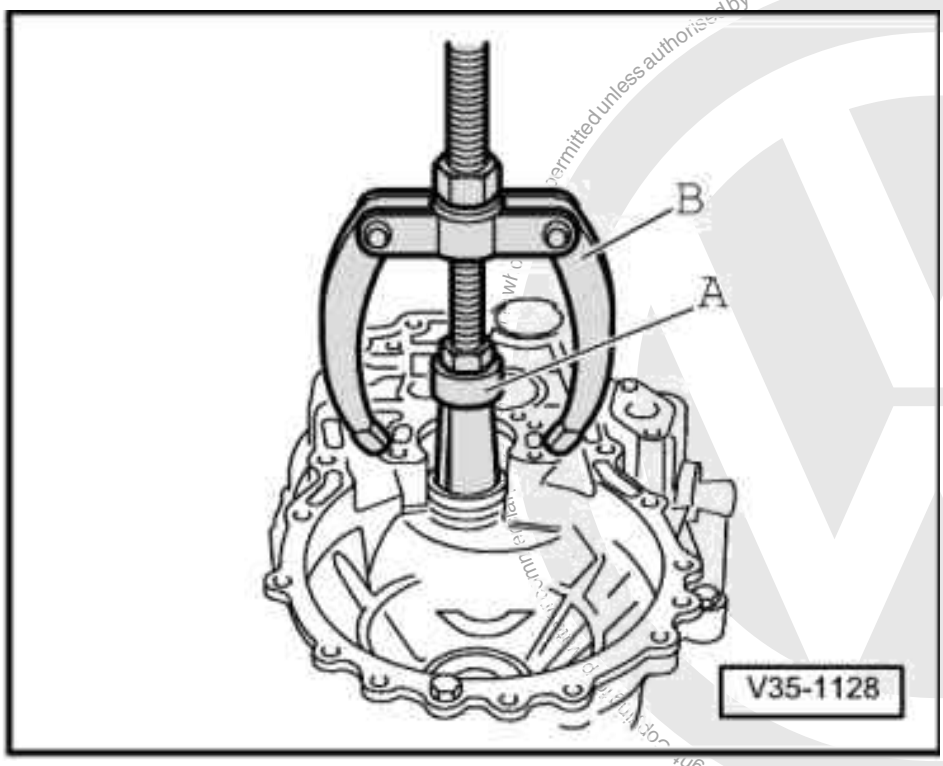

-> Fig.1 Pulling out small taper roller bearing outer race

A - Internal extractor 37 ... 46 mm, e.g. Kukko 21/6

B - Counter support, e.g. Kukko 22/2

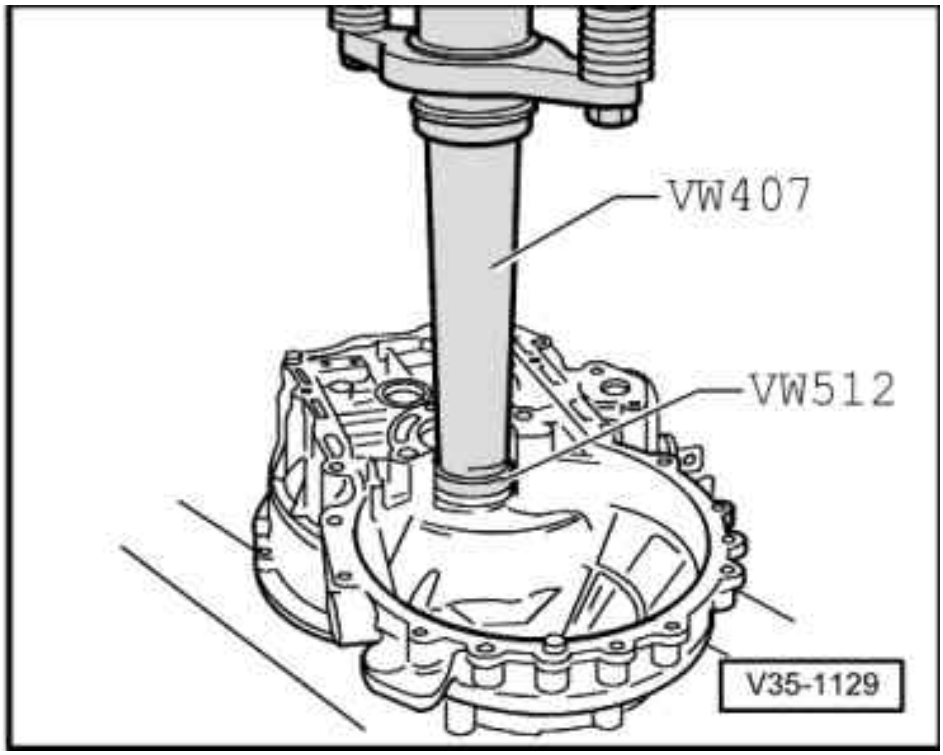

satelettronica

-> Fig.2 Pressing in small taper roller bearing outer race

-> Fig.3 Pulling off small taper roller bearing inner race

A - Vice clamps/vice

- Fit gripping device and tension behind bearing rollers, then turn bearing and retension gripping device.

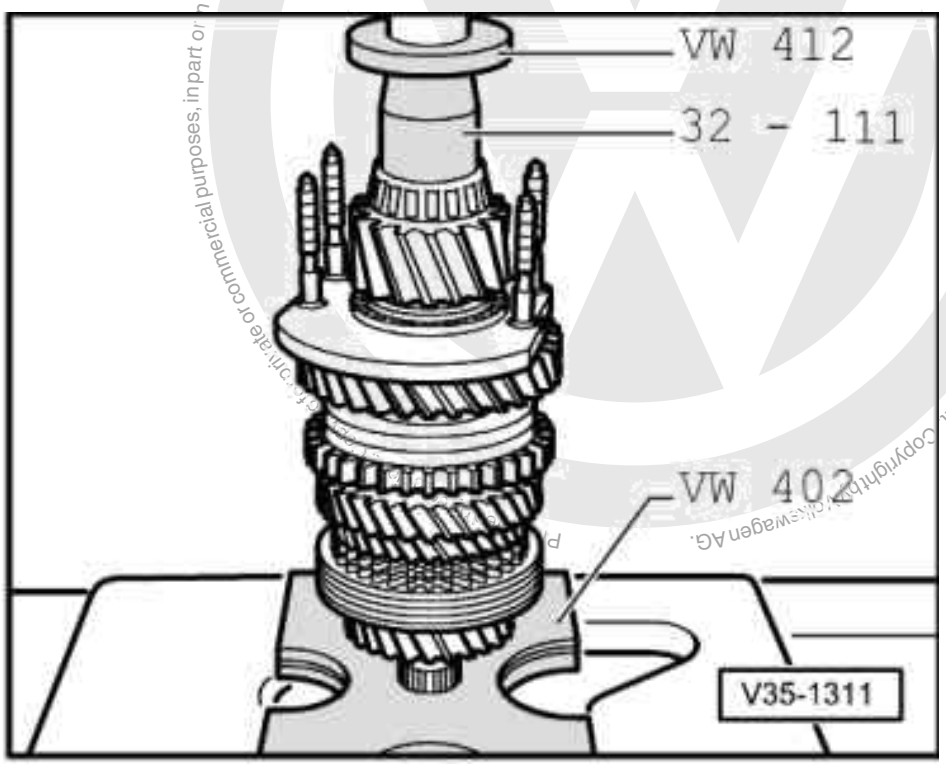

Copyright by Volkswagen AG. Volkswagen AG does not guarantee or accept any liability with respect to the correctness of information in this document. Copyright by Volkswagen AG. Duplicate or commercial purposes, in part or in whole, is not permitted unless authorised by Volkswagen AG.
satelettronica

-> Fig.4 Pressing on small taper roller bearing inner race

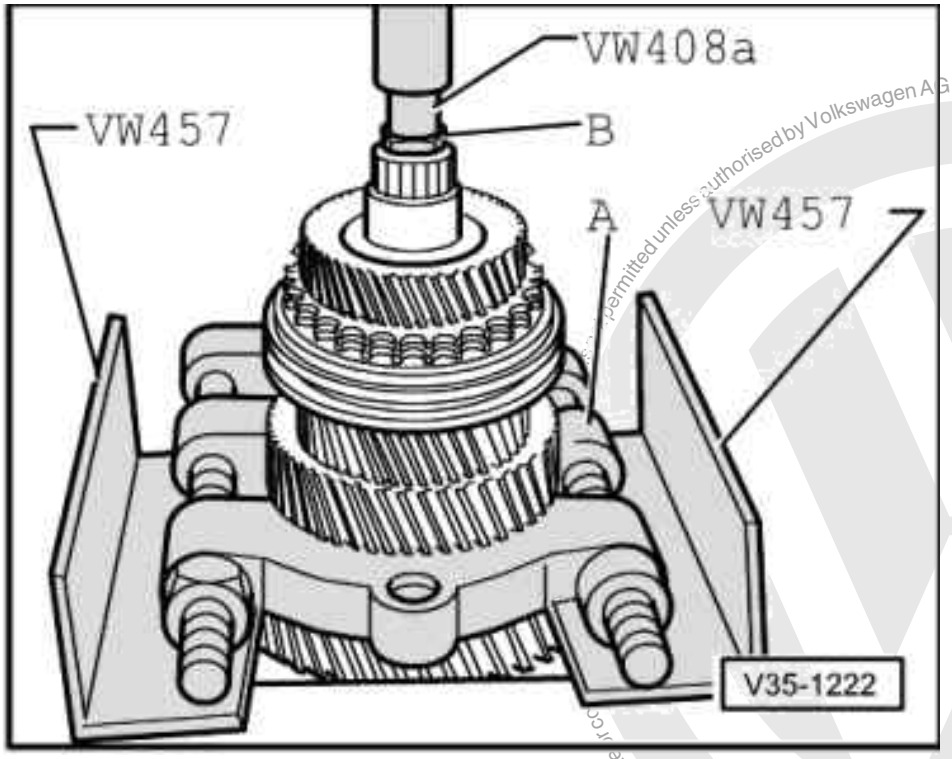

-> Fig.5 Pressing off 3rd and 4th gear synchro-hub/locking collar, 2nd, 3rd and 4th gear wheels with output shaft needle roller bearing sleeve

A - Separating device 22 ... 115 mm, e.g. Kukko 17/2

B - Hexagon bolt 17 mm AF - M10 x 20

Note:

Support separating appliance so that the 1st and 2nd gear locking collar is not pulled off at the same time.

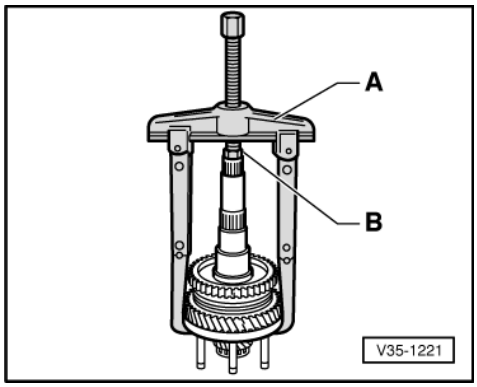

-> Fig.6 Pulling off locking collar with synchro-hub via bearing support

A - Two-arm puller, e.g. Kukko 20/10 with
250 mm reach hooks

Protected by copyright. Copying for private or commercial purposes, in part or in whole, is not permitted unless authorised by Volkswagen AG. Volkswagen AG does not guarantee or accept any liability with respect to the correctness of information in this document. Copyright by Volkswagen AG.
satelettronica

B - Hexagon bolt 17 mm AF - M10 x 20

Note:

Remove circlip before pulling off individual components.

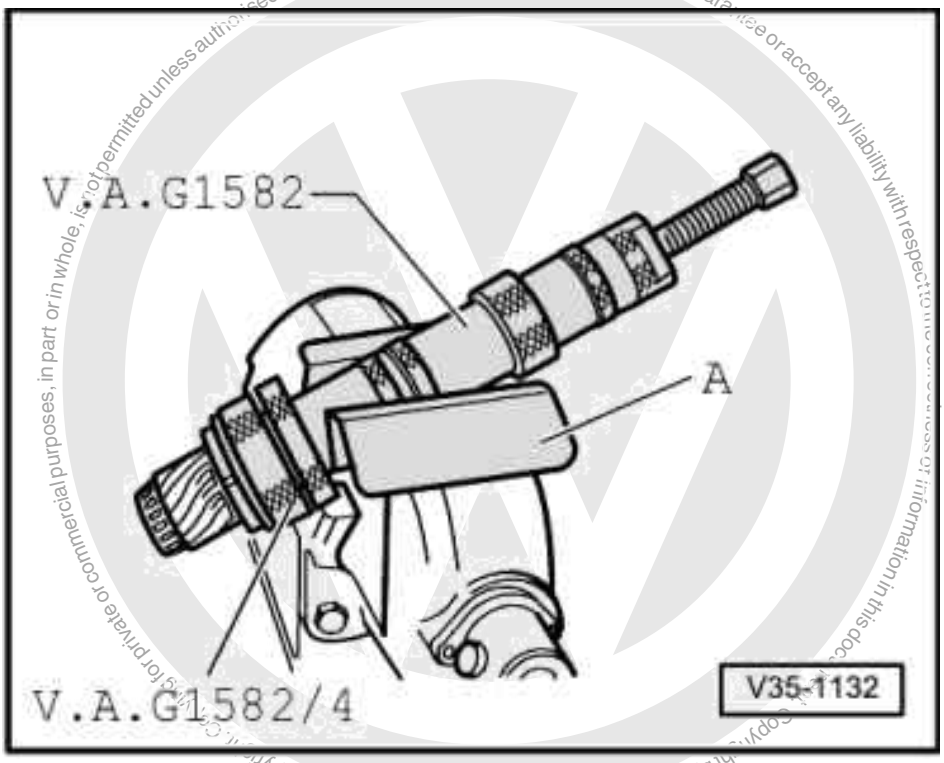

-> Fig.7 Pulling off large taper roller bearing inner race

A - protective jaws

- Before fitting puller insert a M 10 x 20 hexagon bolt in the output shaft drilling.

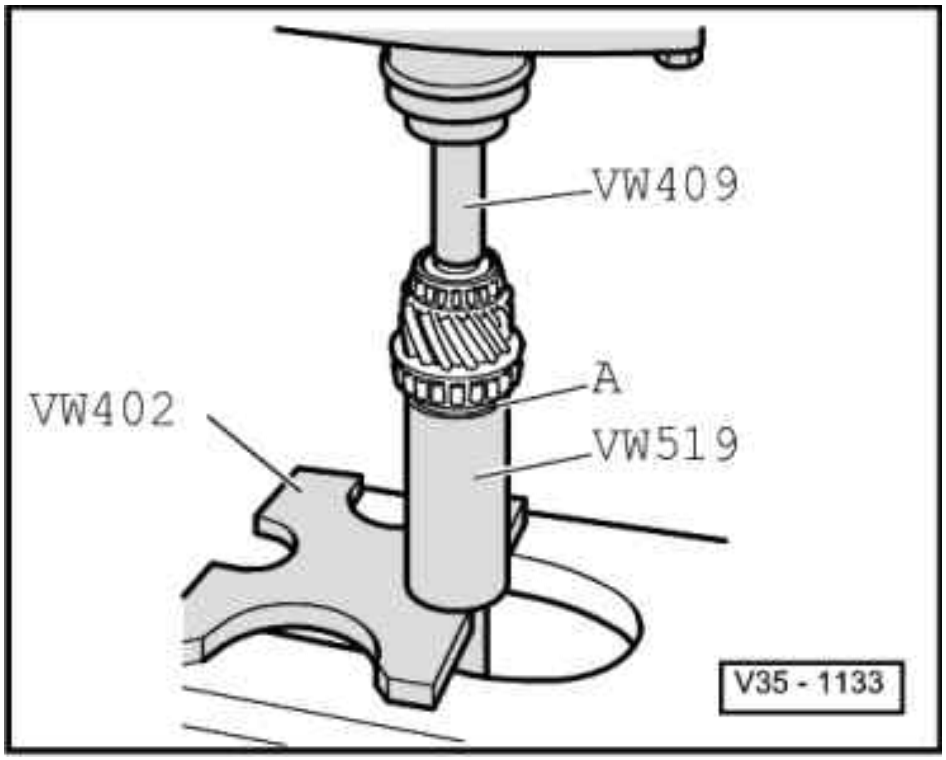

satelettronica

-> Fig.8 Pressing on large taper roller bearing inner race

A - Thrust washer

- Fit thrust washer before pressing on the inner race. The shoulder faces the inner race.

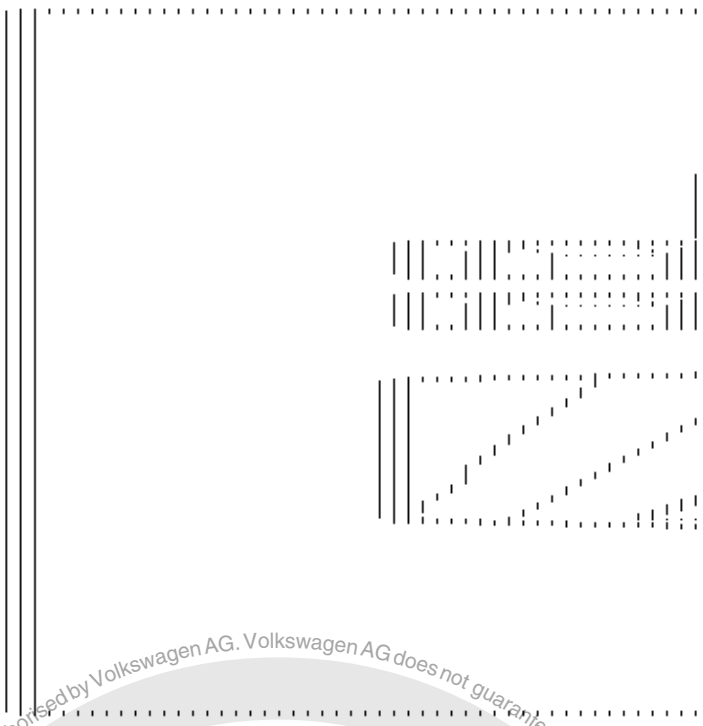

-> Fig.9 Checking synchro-ring for wear

- Press synchro-ring onto the gear cone and measure gap "a" with feeler gauge.

Gap "a"	New dimension	Wear limit
1st gear 3rd gear 4th gear	1.0 ... 1.7 mm 1.0 ... 1.7 mm 1.0 ... 1.7 mm	0.5 mm

Protected by copyright. Copying for private or commercial purposes, in part or in whole, is not permitted unless authorised by Volkswagen AG. Volkswagen AG does not guarantee or accept any liability with respect to the correctness of information in this document. Copyright by Volkswagen AG.
satelettronica

-> Fig.10 Dismantling and assembling 1st and 2nd gear locking collar and synchro-hub

1 - Circlip
2 - Locking collar
3 - Synchro-hub
4 - Locking piece

- Slide locking collar over synchro-hub.

The wide shoulder of the synchro-hub (arrow A) and the outer splines of the locking collar (arrow B) face opposite directions after assembly. Recesses for locking pieces on synchro-hub and locking collar must align.

Protected by copyright. Copying for private or commercial purposes, in part or in whole, is not permitted unless authorised by Volkswagen AG. Volkswagen AG does not guarantee or accept any liability with respect to the correctness of information in this document. Copyright by Volkswagen AG.
satelettronica

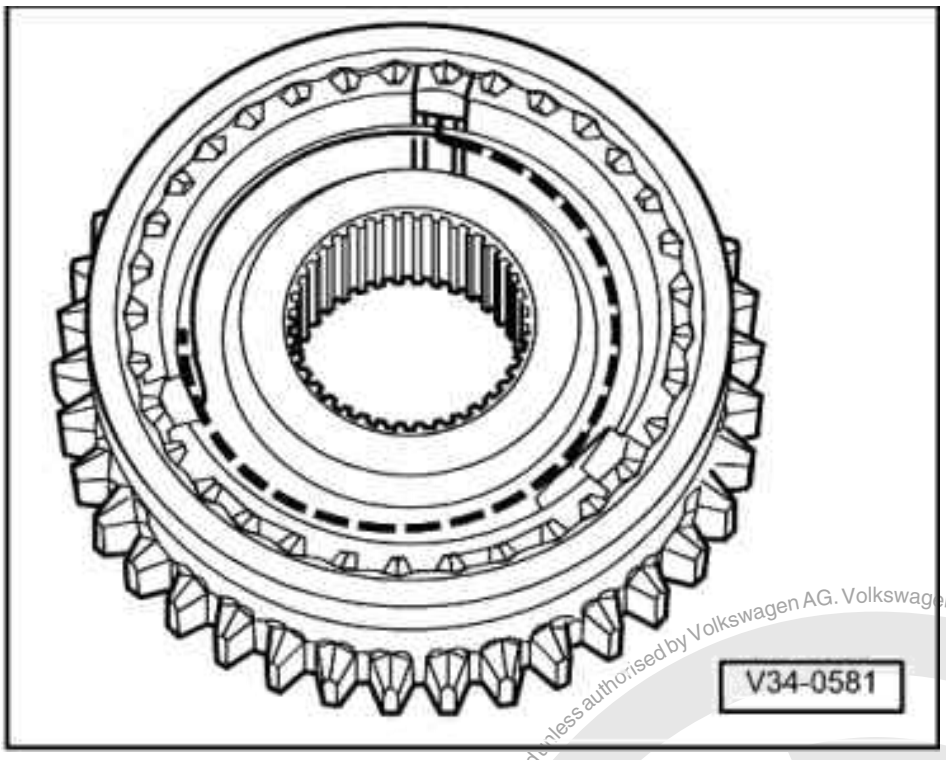

-> Fig.11 Assembling 1st and 2nd gear locking collar/synchro-hub

- Locking collar is pushed over synchro-hub.

- Insert locking pieces and install springs 120° off-set. The angled end of the spring must locate in the hollow locking piece.

Protected by copyright. Copying for private or commercial purposes, in part or in whole, is not permitted unless authorised by Volkswagen AG. Volkswagen AG does not guarantee or accept any liability with respect to the correctness of information in this document. Copyright by Volkswagen AG.
satelettronica

-> Fig.12 Installation position 1st and 2nd gear locking collar/synchro-hub

The locking collar splines (arrow 1) point to splines for 3rd/4th gear synchro-hub -A-.

The wide shoulder of the synchro-hub (arrow 2) then faces to 1st gear -B-.

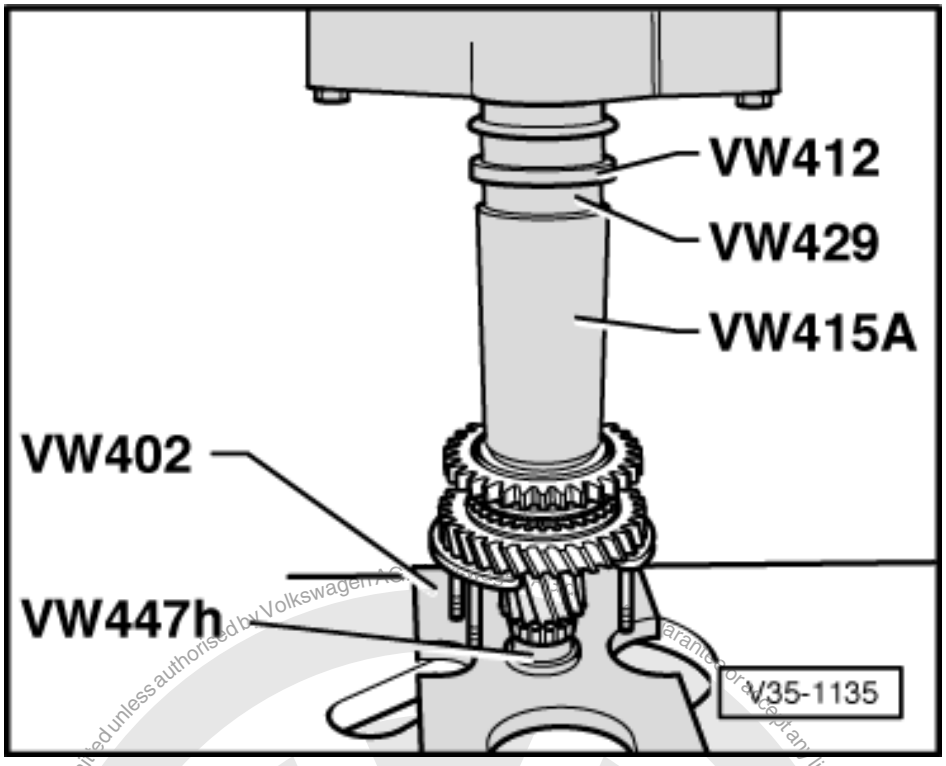

-> Fig.13 Pressing on 1st and 2nd gear locking collar/synchro-hub

Note:

Before pressing on, place 1st gear synchro-ring on 1st gear wheel.

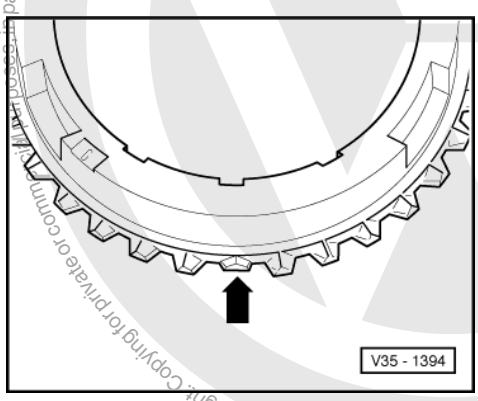

-> Fig.14 Identifying 1st and 2nd gear synchro-rings

- 1st gear synchro-ring: 3 ground-down half teeth (arrow)
- 2nd gear synchro-ring: 3 ground down half teeth (arrow) or 2 ground-down half teeth

Only the version with 2 ground-down half teeth is available as a spare part for the 2nd gear synchro-ring.

satelettronica

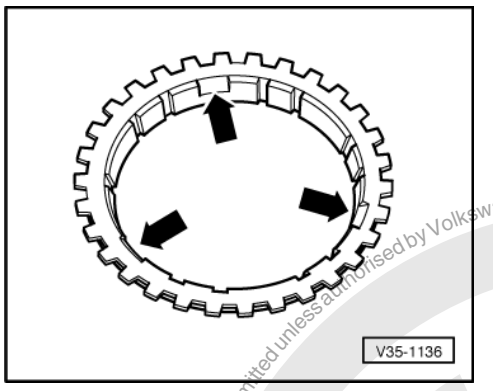

-> Fig.15 Distinguishing 1st and 2nd gear synchro-rings

- 1st gear synchro-ring - no recesses
- 2nd gear synchro-ring - three recesses (arrows)

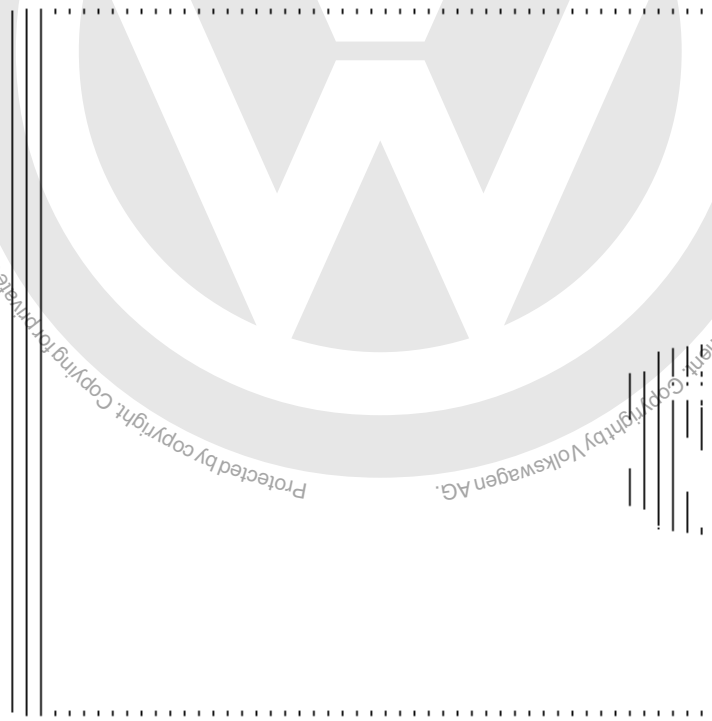

-> Fig.16 Checking 2nd gear synchro-ring for wear

- Press synchro-ring, outer-ring and inner-ring onto selector gear cone and measure gap "a" with feeler gauge.

Gap "a"	New dimension	Wear limit
2nd gear	1.2 ... 1.8 mm	0.5 mm

Protected by copyright. Copying for private or commercial purposes, in part or in whole, is not permitted unless authorised by Volkswagen AG. Volkswagen AG does not guarantee or accept any liability with respect to the correctness of information in this document. Copyright by Volkswagen AG.

satelettronica

-> Fig.17 Installation position outer-ring

The lugs (arrows) face to 1st gear -A-

Protected by copyright. Copying for private or commercial purposes, in part or in whole, is not permitted unless authorised by Volkswagen AG. Volkswagen AG does not guarantee or accept any liability with respect to the correctness of information in this document. Copyright by Volkswagen AG.

satelettronica

-> Fig.18 Checking inner ring for wear

- Press inner ring onto 2nd selector gear cone and measure gap "a" with a feeler gauge.

Gap "a"	New dimension	Wear limit
2nd gear	0.75 ... 1.25 mm	0.3 mm

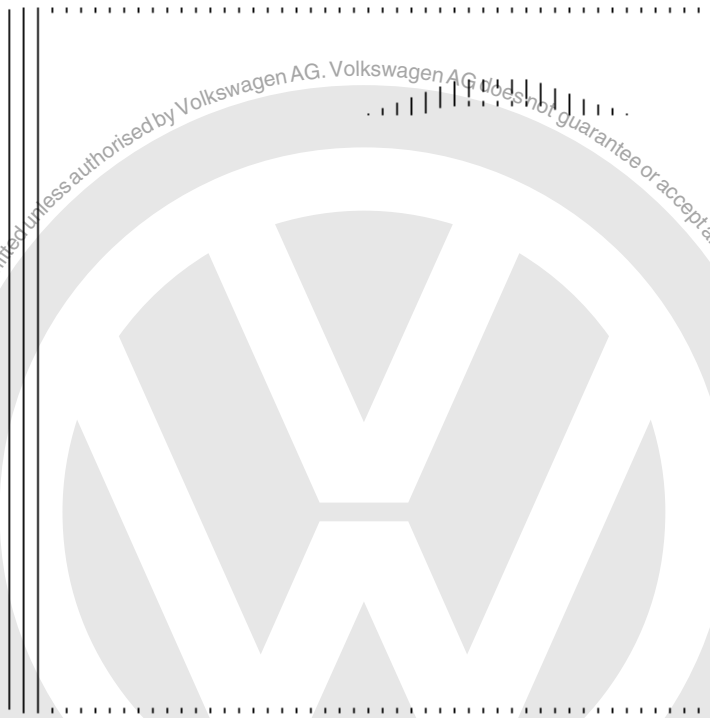

Protected by copyright. Copying for private or commercial purposes, in part or in whole, is not permitted unless authorised by Volkswagen AG. Volkswagen AG does not guarantee or accept any liability with respect to the correctness of information in this document. Copyright by Volkswagen AG.

-> Fig.19 Installation position synchro-ring (inner-ring) -A-

The lugs (arrow 1) locate in the recesses (arrow 2) in the synchro-ring -B-.

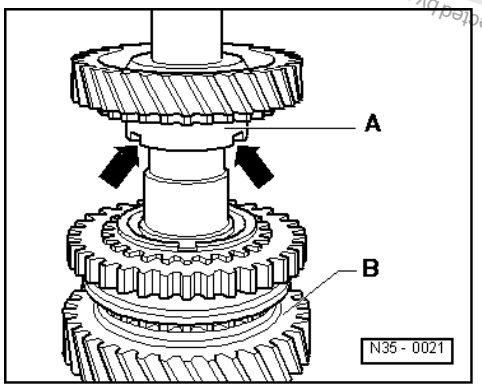

-> Fig.20 Installation position 2nd gear wheel

The higher shoulder -A- faces to 1st gear -B-. The recesses in the shoulder (arrows) locate with the lugs of the outer-ring (arrow => Fig. 17)

satelettronica

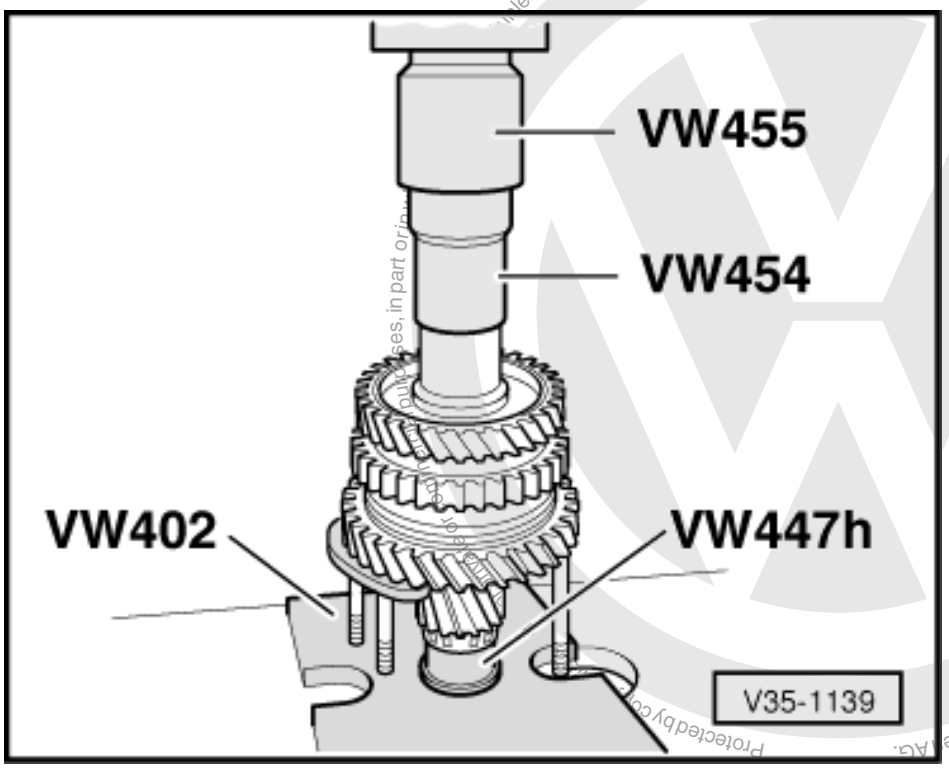

-> Fig.21 Pressing on needle roller bearing sleeve for 3rd gear

-> Fig.22 Dismantling and assembling 3rd and 4th gear locking collar and synchro-hub

1 - Spring
2 - Locking piece
3 - Locking collar

satelettronica

4 - Synchro-hub

- Slide locking collar over synchro-hub.

The recesses for locking pieces in synchro-hub and locking collar must align.

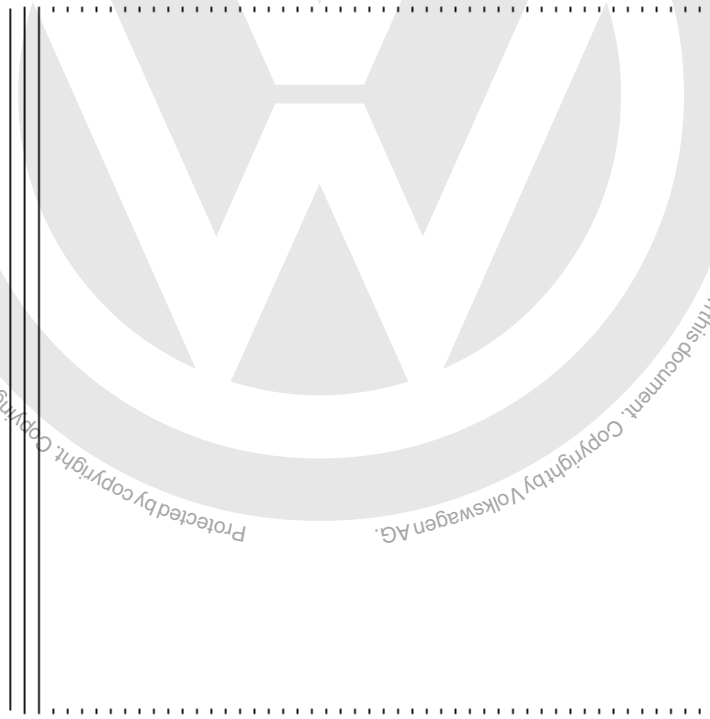

-> Fig.23 Assembling 3rd and 4th gear locking collar/synchro-hub

The locking collar has been pushed over the synchro-hub.

- Insert locking pieces and install springs 120° off-set. The angled end of the spring must locate in the hollow locking piece.

Protected by copyright. Copying for private or commercial purposes, in part or in whole, is not permitted unless authorised by Volkswagen AG. Volkswagen AG does not guarantee or accept any liability with respect to the correctness of information in this document. Copyright by Volkswagen AG.

satelettronica

-> Fig.24 Installation position 3rd and 4th gear locking collar/synchro-hub

Chamfer (arrow) faces to 4th gear.

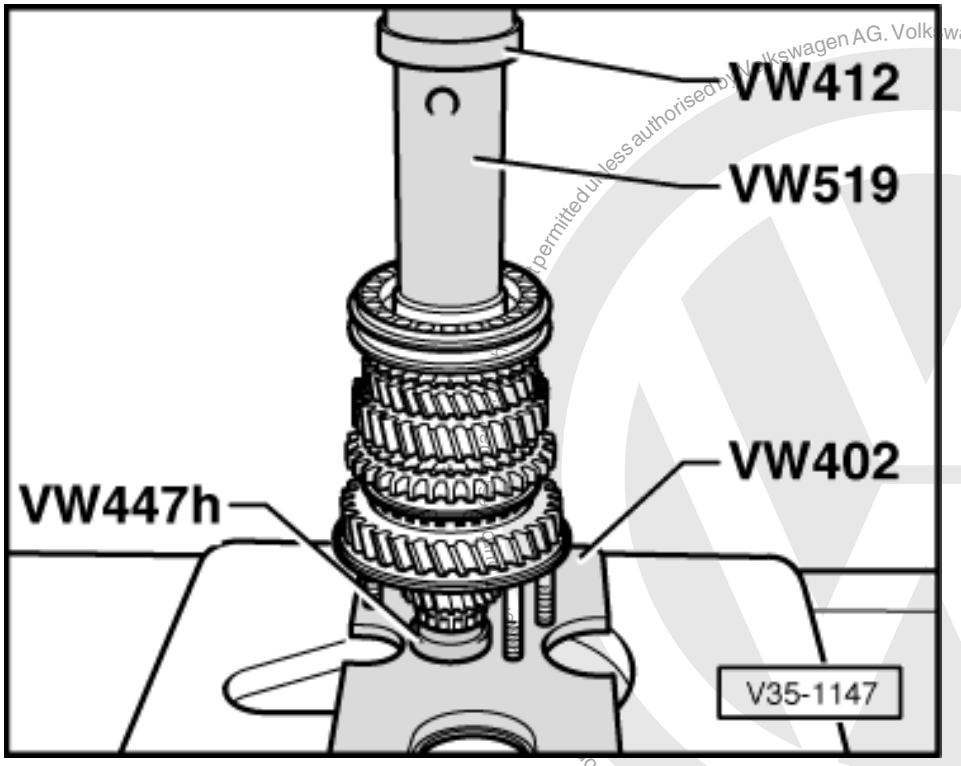

satelettronica
Protected by copyright. Copying for private or commercial purposes, in part or in whole, is not permitted unless authorised by Volkswagen AG. Volkswagen AG does not guarantee or accept any liability with respect to the correctness of information in this document. Copyright by Volkswagen AG.

Protected by copyright. Copying for private or commercial purposes, in part or in whole, is not permitted unless authorised by Volkswagen AG. Volkswagen AG does not guarantee or accept any liability with respect to the correctness of information in this document. Copyright by Volkswagen AG.

-> Fig.25 Pressing on 3rd and 4th gear synchro-hub with locking collar

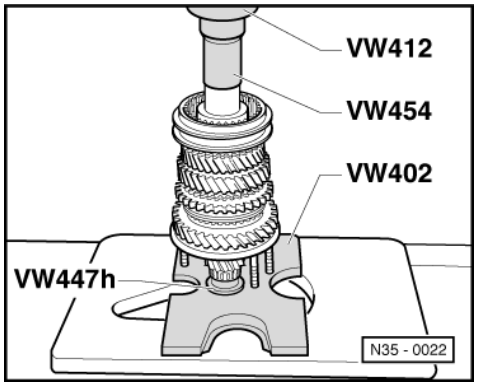

-> Fig.26 Pressing on sleeve for 4th gear needle roller bearing

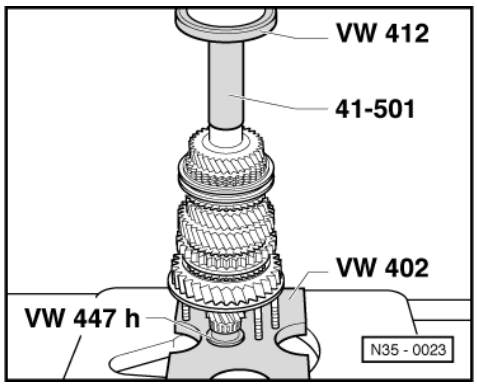

-> Fig.27 Pressing on sleeve for output shaft needle roller bearing

3.2 - From gearbox build date 04 09 0 the synchronisation for 1st gear has been modified

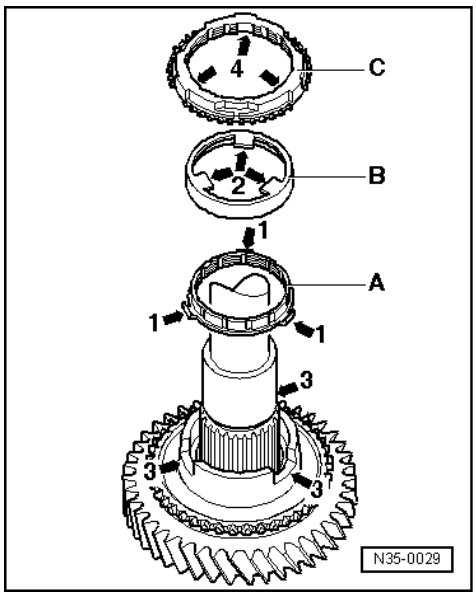

satelettronica

-> The following components have been added or modified:

- A- Inner ring
- B- Outer ring
- C- Synchro-ring

with additional recesses -4- for the lugs -1- of inner ring -A-.

- 1st gear wheel

with additional recesses -3- for the lugs -2- of outer ring -B-.

Note:

For the 2nd gear the same inner ring, outer ring and synchro ring are installed.

- If the components are not renewed, ensure they are reallocated to the original gear.

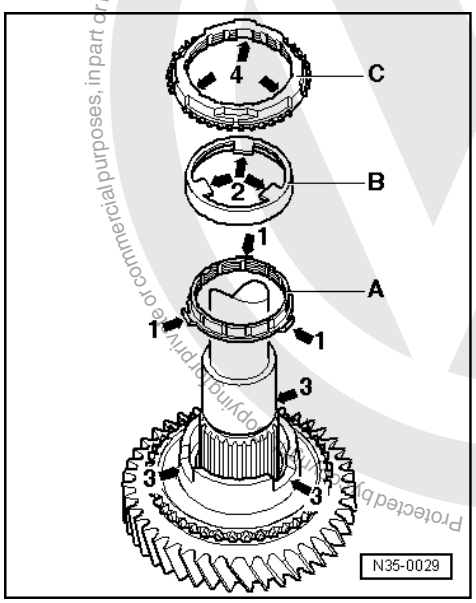

-> Installation position of inner ring, outer ring and synchro-ring 1st gear:

- Place inner ring -A- on 1st gear wheel.

Angled lugs (arrow 1) point towards outer ring -B-.

- Fit outer ring -B-.

Lugs (arrow 2) engage in gear wheel recesses (arrow 3).

- Fit synchro-ring -C-.

The recesses (arrow 4) engage in lugs (arrow 1) of inner ring -A-.

Protected by copyright. Copying for private or commercial purposes, in part or in whole, is not permitted unless authorised by Volkswagen AG. Volkswagen AG does not guarantee or accept any liability with respect to the correctness of information in this document. Copyright by Volkswagen AG.
satelettronica

Protected by copyright. Copying for private or commercial purposes, in part or in whole, is not permitted unless authorised by Volkswagen AG. Volkswagen AG does not guarantee or accept any liability with respect to the correctness of information in this document. Copyright by Volkswagen AG.

-> Check inner ring 1st gear for wear

- Press inner ring onto gear wheel cone and measure gap "a" with a feeler gauge.

Gap "a"	New dimension	Wear limit
1st gear	0.75 ... 1.25 mm	0.3 mm

satelettronica

-> Check synchro-ring 1st gear and outer ring for wear

- Press synchro-ring, outer-ring and inner-ring onto selector gear cone and measure gap "a" with feeler gauge.

Gap "a"	New dimension	Wear limit
1st gear	1.2 ... 1.8 mm	0.5 mm

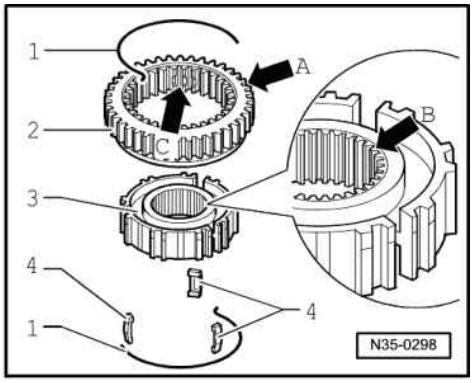

-> Assembling locking collar and locking pieces with 1st and 2nd gear synchro-hub

1 - Circlip
2 - Locking collar
3 - Synchro-hub
4 - Locking piece

With introduction of the modified 1st gear synchronisation the shoulder has the same width on both sides of synchro-hub.

The shoulder has a chamfer on one side (arrow B).

After assembly the shoulder of the synchro-hub and the outer splines of the locking collar (arrow A) face same direction.

Recesses for locking pieces on synchro-hub and locking collar (arrow C) must align.

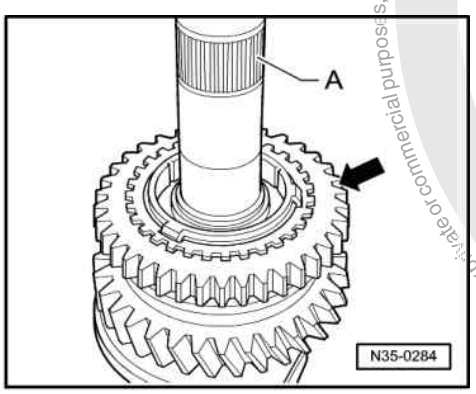

-> Installation position of locking collar/synchro-hub 1st and 2nd gear

The locking collar splines (arrow) point to splines for 3rd/4th gear synchro-hub -A-.

- Remove the 1st gear synchro-hub as described and install again.

Protected by copyright. Copying for private or commercial purposes, in part or in whole, is not permitted unless authorised by Volkswagen AG. Volkswagen AG does not guarantee or accept any liability with respect to the correctness of information in this document. Copyright by Volkswagen AG.
satelettronica

4 - Adjusting output shaft

4.1 - Adjusting output shaft

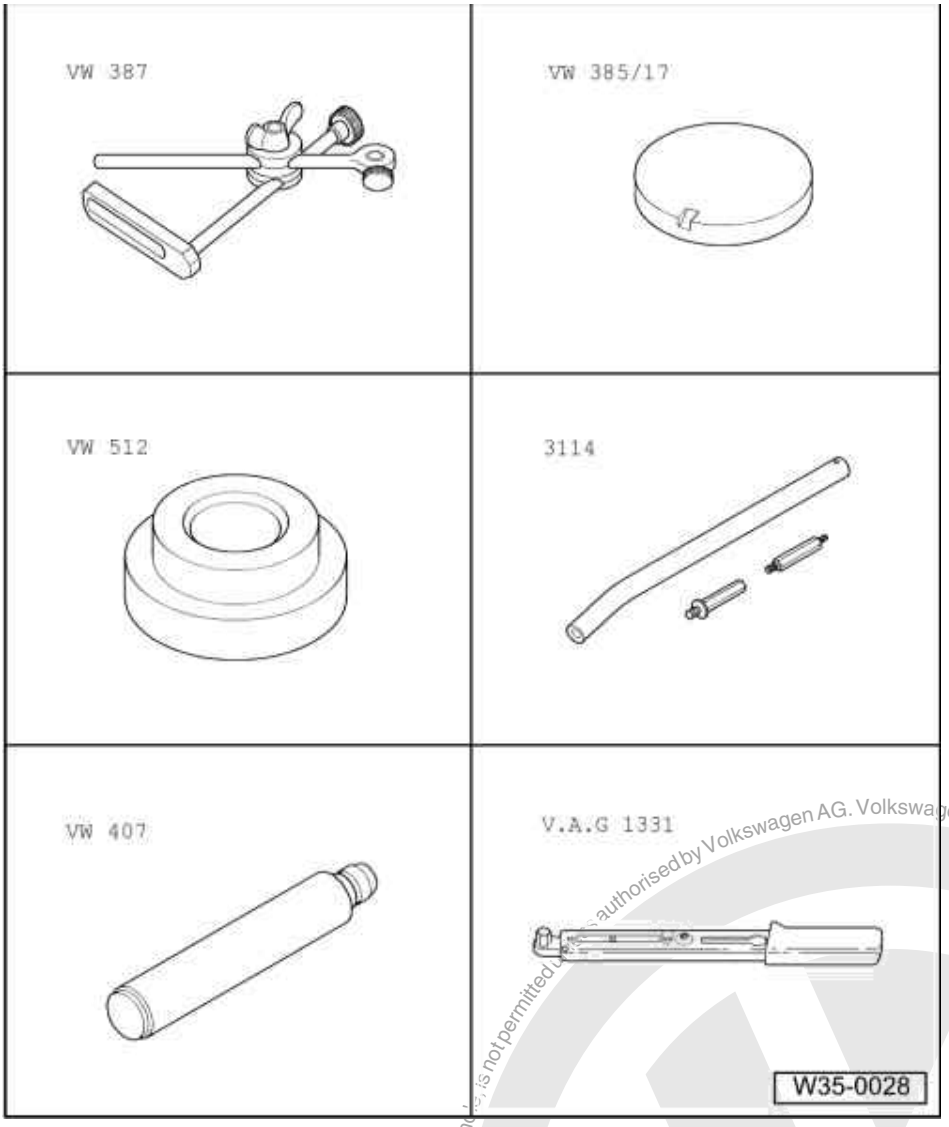

(Determining shim for output shaft)

Special tools and workshop equipment required

- VW 387 Universal dial gauge bracket
- VW 385/17 End measuring plate
- VW 512 Press disk
- 3114/2 Straightening tool
- VW 407 Press tool
- V.A.G 1331 Torque wrench
- Dial gauge

Protected by copyright. Copying for private or commercial purposes, in part or in whole, is not permitted unless authorised by Volkswagen AG. Volkswagen AG does not guarantee or accept any liability with respect to the correctness of information in this document. Copyright by Volkswagen AG.
satelettronica

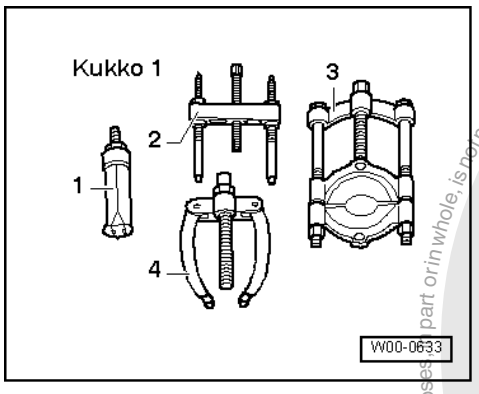

Special tools and workshop equipment required

- 1 - Internal puller Kukko 21/6
- 4 - Kukko 22/2 Counter support

It is necessary to readjust the output shaft when the following components are renewed:

- Final drive
- Clutch housing

or

- Taper roller bearing

Adjustment overview => Page 195

- Press small taper roller bearing outer race together with a 0.65 mm thick shim fully into clutch housing=>Page 151 .
- Insert output shaft and tighten nuts for bearing support to 25 Nm, then turn 90° further.

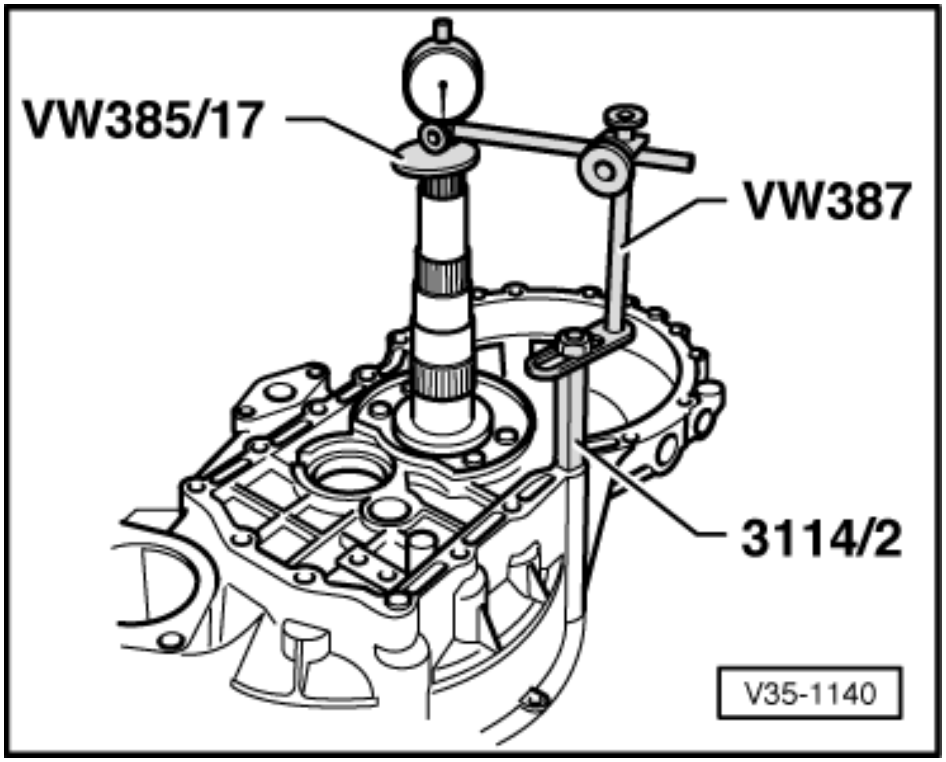

- -> Mount dial gauge (3 mm measuring range) and set to "0" with 1 mm preload.

Protected by copyright. Copying for private or commercial purposes, part or in whole, is not permitted unless authorised by Volkswagen AG. Volkswagen AG does not guarantee or accept any liability with respect to the correctness of information in this document. Copyright by Volkswagen AG.
satelettronica

- Move output shaft up and down and note dial gauge reading (example: 0.30 mm).

Determining thickness of shim

The specified bearing preload is obtained by adding
a constant preload figure of (0.20 mm)
to the reading obtained (0.30 mm)
and the thickness of the shim installed (0.65 mm).

Example:

Shim installed	0.65 mm
+ Reading	0.30 mm
+ Preload (constant)	0.20 mm
Thickness of shim	1.15 mm

- Remove output shaft and pull out small taper roller bearing outer race => Page 150

The following adjustment shims are available:

Size (mm)	Part No.
0.65	020 311 391 P
0.70	020 311 391 Q
0.75	020 311 391
0.80	020 311 391 A
0.85	020 311 391 B
0.90	020 311 391 C
0.95	020 311 391 D
1.00	020 311 391 E
1.05	020 311 391 F
1.10	020 311 391 G
1.15	020 311 391 H
1.20	020 311 391 J
1.25	020 311 391 K
1.30	020 311 391 L
1.35	020 311 391 M
1.40	020 311 391 N

Varying tolerances make it possible to obtain the exact shim thickness required.

- Press in small taper roller bearing outer race together with the correct shim (in example 1.15 mm) (=>Page 151) and install output shaft. Tighten bearing support nuts in clutch housing to 25 Nm and then turn 90° further.

Protected by copyright. Copyright by Volkswagen AG. Volkswagen AG does not guarantee or accept any liability with respect to the correctness of information in this document. Copyright by Volkswagen AG. Copying for private or commercial purposes, in part or in whole, is not permitted unless authorised by Volkswagen AG.
satelettronica

5 - Dismantling and assembling reverse shaft

5.1 - Dismantling and assembling reverse shaft

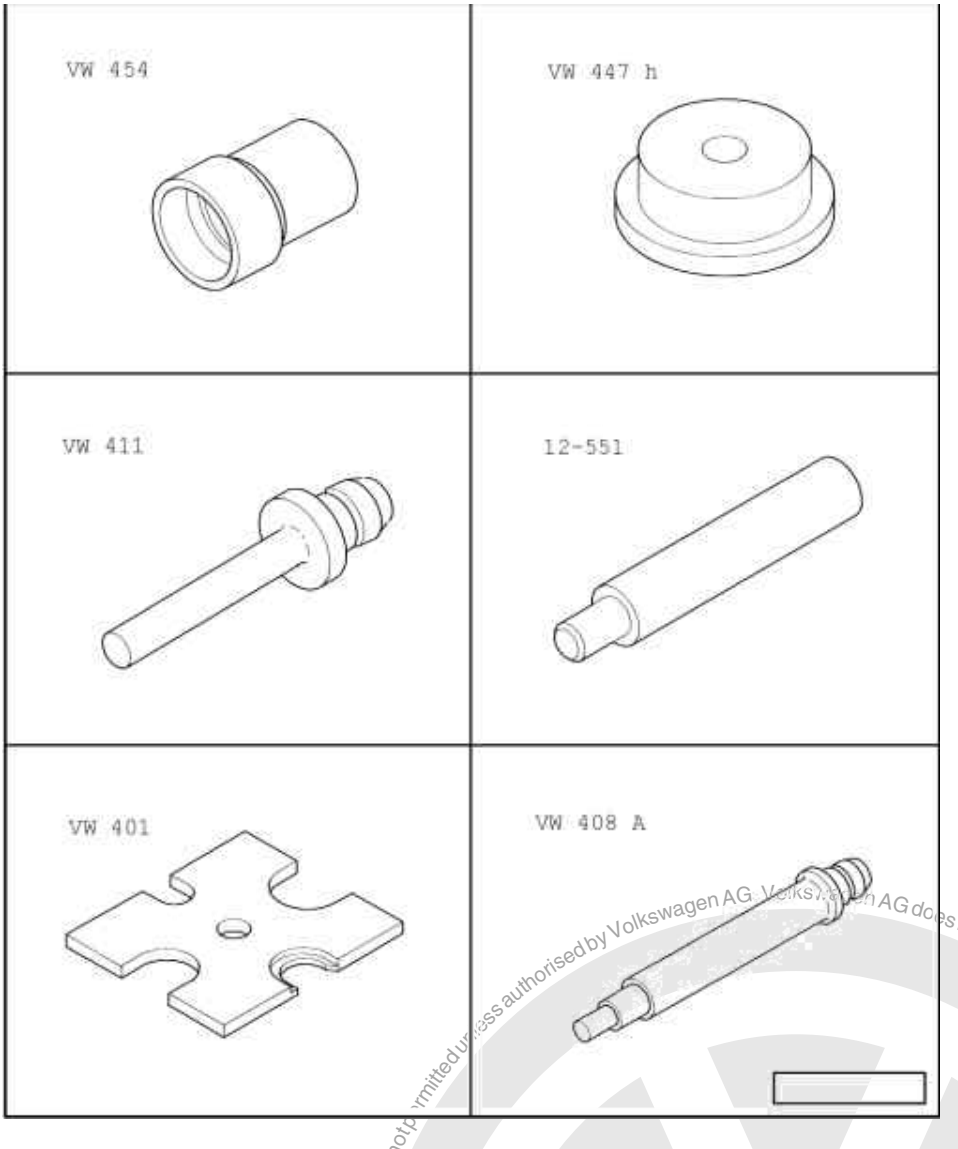

Special tools and workshop equipment required

- VW 454 Press piece
- VW 447 H Press plate
- VW 411 Press tool
- 12-551 Centring mandrel
- VW 401 Thrust plate
- VW 408 A Press tool

satelettronica
Protected by copyright. Copying for private or commercial purposes, in part or in whole is not permitted unless authorised by Volkswagen AG. Volkswagen AG does not guarantee or accept any liability with respect to the correctness of information in this document. Copyright by Volkswagen AG.

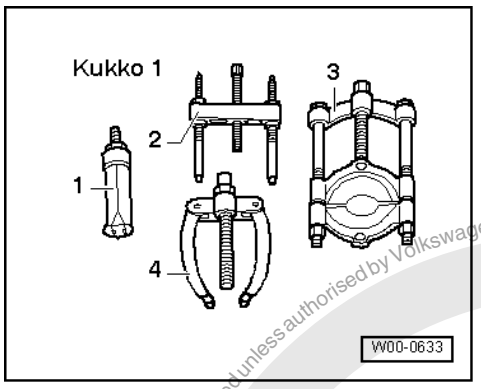

Special tools and workshop equipment required

- 1 - Internal puller Kukko 21/2
- 4 - Counter support Kukko 22/1

Protected by copyright. Copying for private or commercial purposes, in part or in whole, is not permitted unless authorised by Volkswagen AG. Volkswagen AG does not guarantee or accept any liability with respect to the correctness of information in this document. Copyright by Volkswagen AG.

satelettronica

Note:

After dismantling, always renew needle roller bearing in clutch housing and reverse shaft support.

1 Clutch housing
2 Needle roller bearing
- Pulling out => Fig. 1
- Pressing in => Fig. 2

3 Reverse gear wheel
4 Circlip
- Always renew after removing

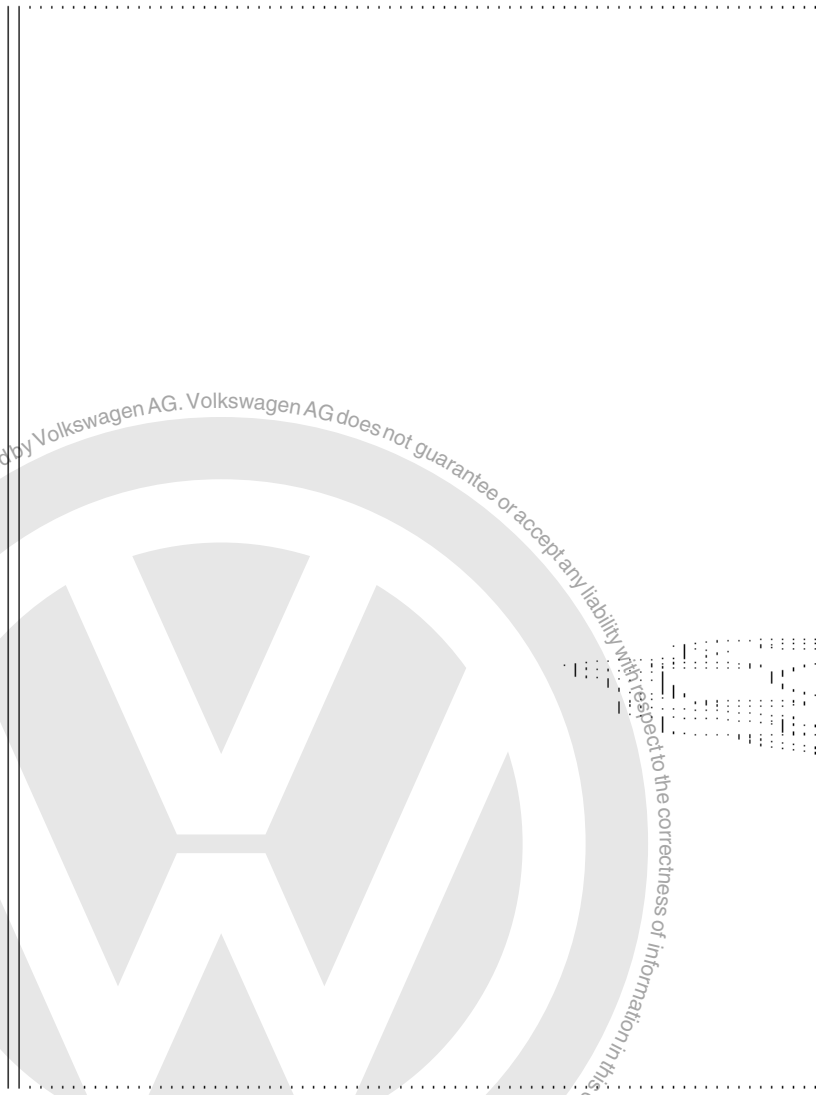

5 Reverse sliding gear wheel
- Before replacing remove circlip
- Shoulder faces to reverse gear wheel

6 Reverse shaft
- Removing => Page 79

7 Needle roller bearing
- Pressing out => Fig. 3
- Pressing in => Fig.4

8 Reverse shaft support
- Removing and installing

Protected by copyright. Copying for private or commercial purposes, in part or in whole, is not permitted unless authorised by Volkswagen AG. Volkswagen AG does not guarantee or accept any liability with respect to the correctness of information in this document. Copyright by Volkswagen AG.

satelettronica

=> Page 79

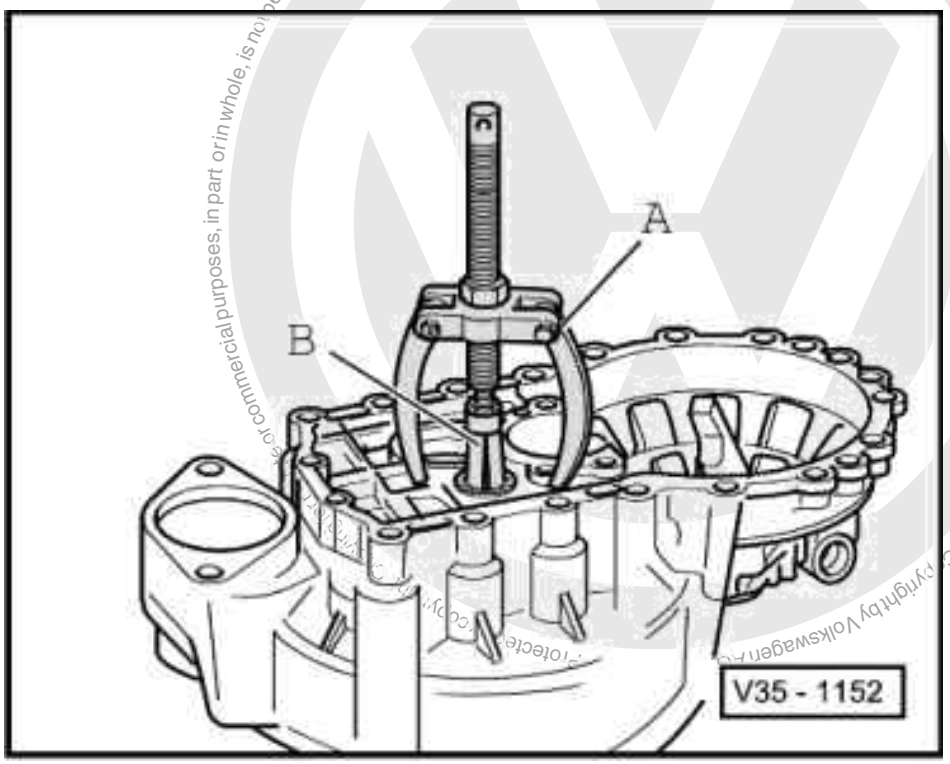

-> Fig.1 Pulling needle roller bearing out of clutch housing

A - Counter support, e.g. Kukko 22/1

B - Internal extractor 14.5 ... 18.5 mm, e.g. Kukko 21/2

Note:

The needle bearing is destroyed during removal and must be renewed.

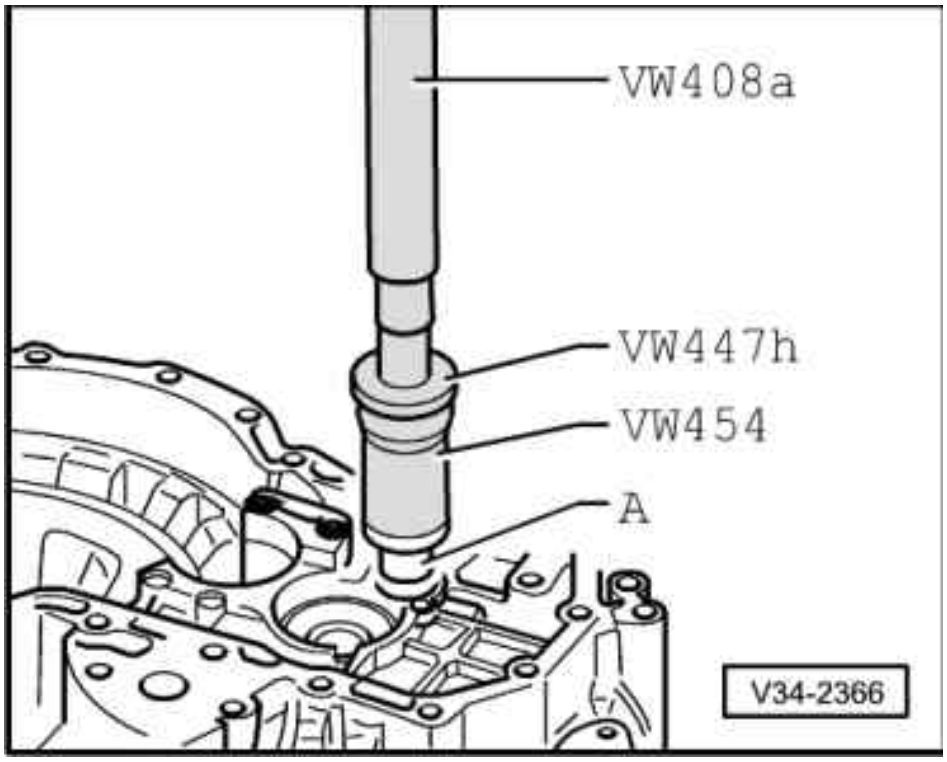

Volkswagen AG. Volkswagen AG does not guarantee or accept any liability with respect to the correctness of information in this document. Copyright by Volkswagen AG. Not to be reproduced or commercial purposes, in part or in whole, is not permitted unless authorised by Volkswagen AG.

satelettronica

-> Fig.2 Pressing needle roller bearing -A- into clutch housing

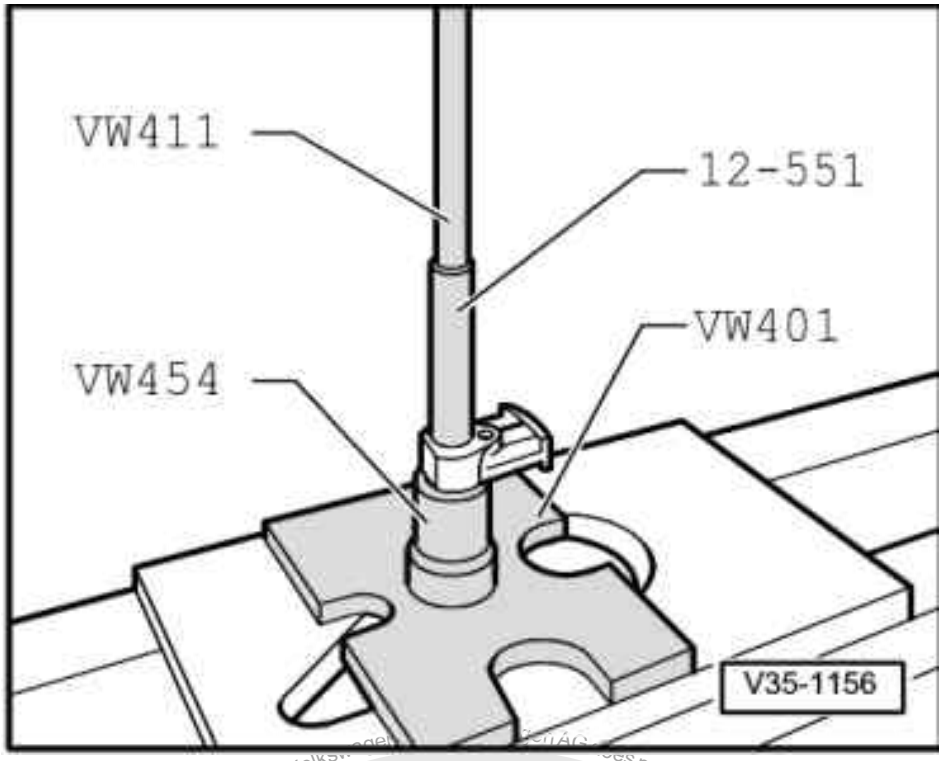

-> Fig.3 Pressing needle roller bearing out of the reverse shaft support

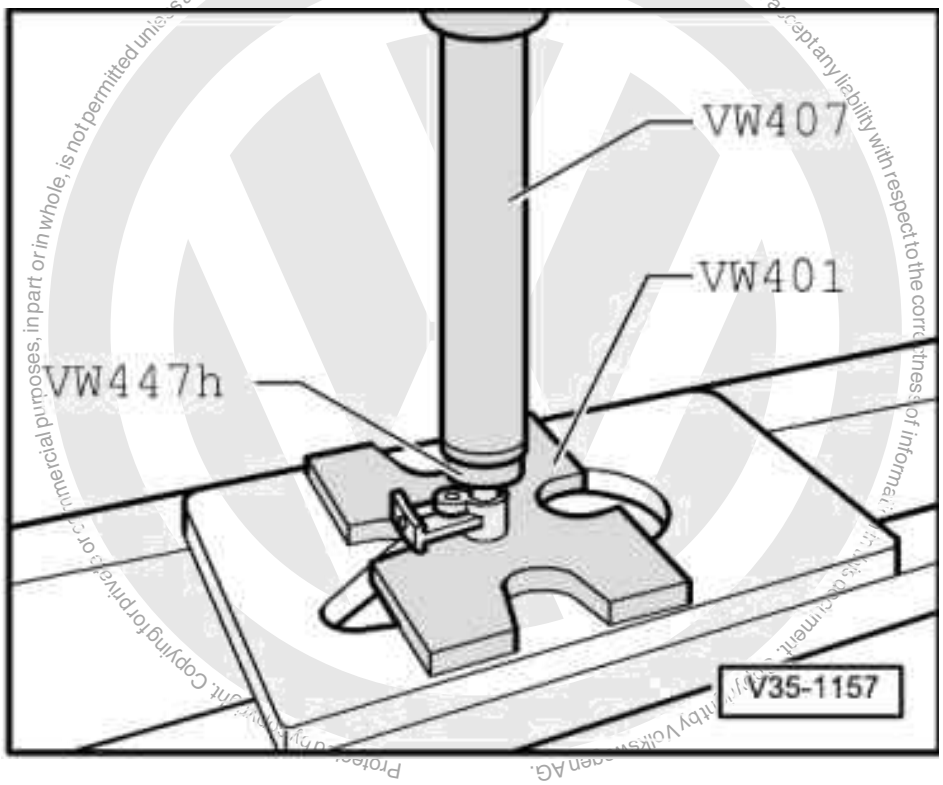

-> Fig.4 Pressing needle roller bearing into reverse shaft support

satelettronica

39 - Final drive, Differential rear

1 - Renewing oil seals for flanged shafts

1.1 - Renewing oil seals for flanged shafts

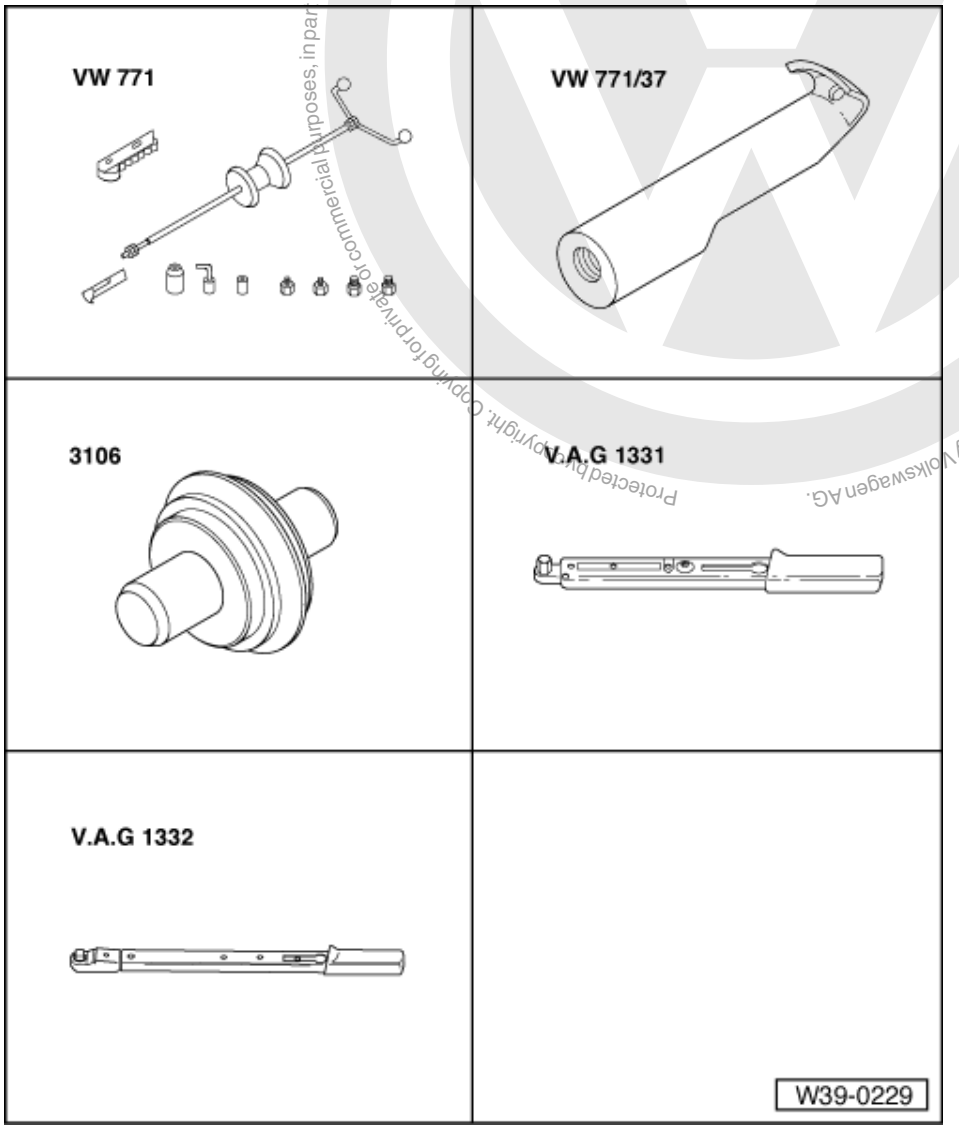

(Gearbox in vehicle)

1.2 - Renewing oil seal for left flanged shaft

Special tools and workshop equipment required

- VW 771 Multi-purpose tool
- VW771/37 Puller hooks
- 3106 Drift
- V.A.G 1331 Torque wrench

Protected by copyright. Copying for private or commercial purposes, in part or in whole, is not permitted unless authorised by Volkswagen AG. Volkswagen AG does not guarantee or accept any liability with respect to the correctness of information in this document. Copyright by Volkswagen AG.
satelettronica

- V.A.G 1332 Torque wrench

Removing

- Remove wheel.

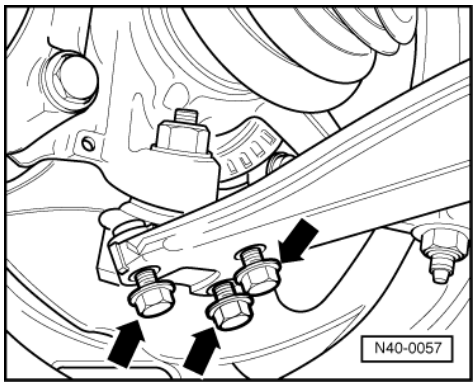

- Remove insulation tray below engine/gearbox, if fitted.
- Turn steering to left lock.
- Disconnect drive shaft from flanged shaft.
- -> Mark installation position of bolts -arrows-.
- Remove bolts -arrows-.
- Tie-up drive shaft as high as possible. Do not damage paint on drive shaft.

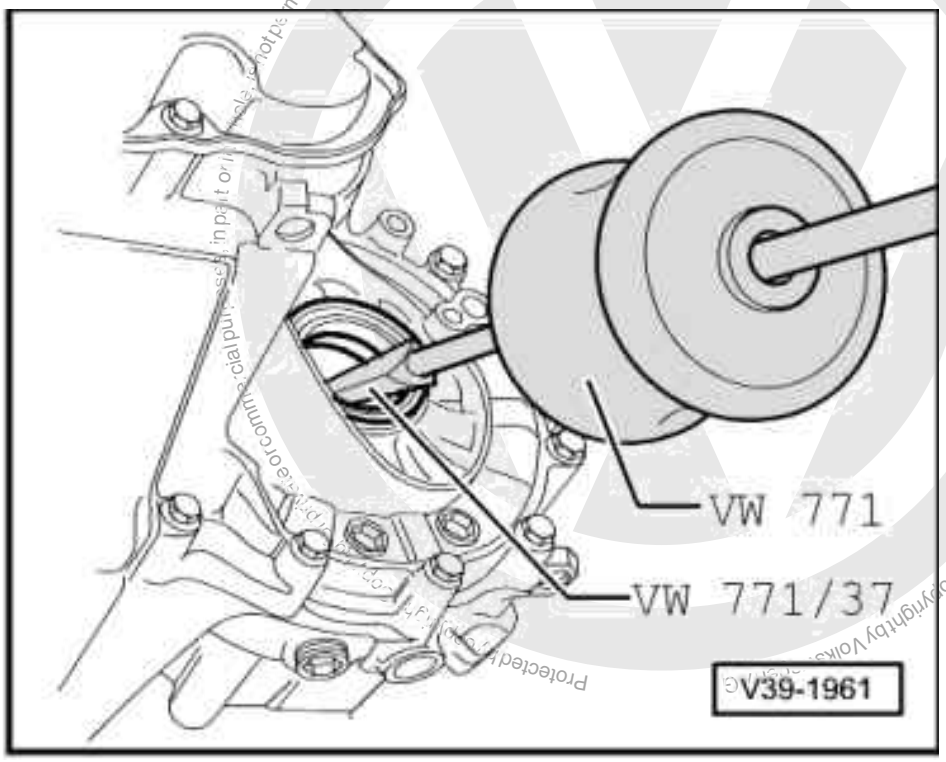

- Remove flanged shaft securing bolts, to do this screw two bolts into the flange and counterhold flanged shaft using a lever.
- Place container under the gearbox.
- Remove flanged shaft with spring.
- -> Pull flanged shaft oil seal out using VW 771 and VW 771/37.

satelettronica

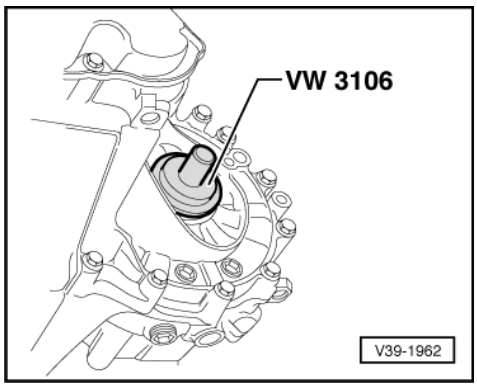

Installing

- -> Drive new seal in onto stop, do not cant seal when doing this.
- Fill space between sealing lip and dust lip with grease G 052 128 A1.
- Insert flanged shaft.
- Secure flange shaft with countersunk bolt.
- Fit drive shafts to gearbox.

=> Running gear, axles, steering; Repair group 40; Servicing drive shafts, Removing and installing drive shafts Servicing drive shafts, Removing and installing drive shafts

- Fit wheel.
- Check gearbox oil =>Page 67 .
- Install noise insulation tray.

Tightening torque

Flanged shaft to gearbox (conical head bolt)	25 Nm

Protected by copyright. Copying for private or commercial purposes, in part or in whole, is not permitted unless authorised by Volkswagen AG. Volkswagen AG does not guarantee or accept any liability with respect to the correctness of information in this document. Copyright by Volkswagen AG.

satelettronica

1.3 - Renewing oil seal for right flanged shaft

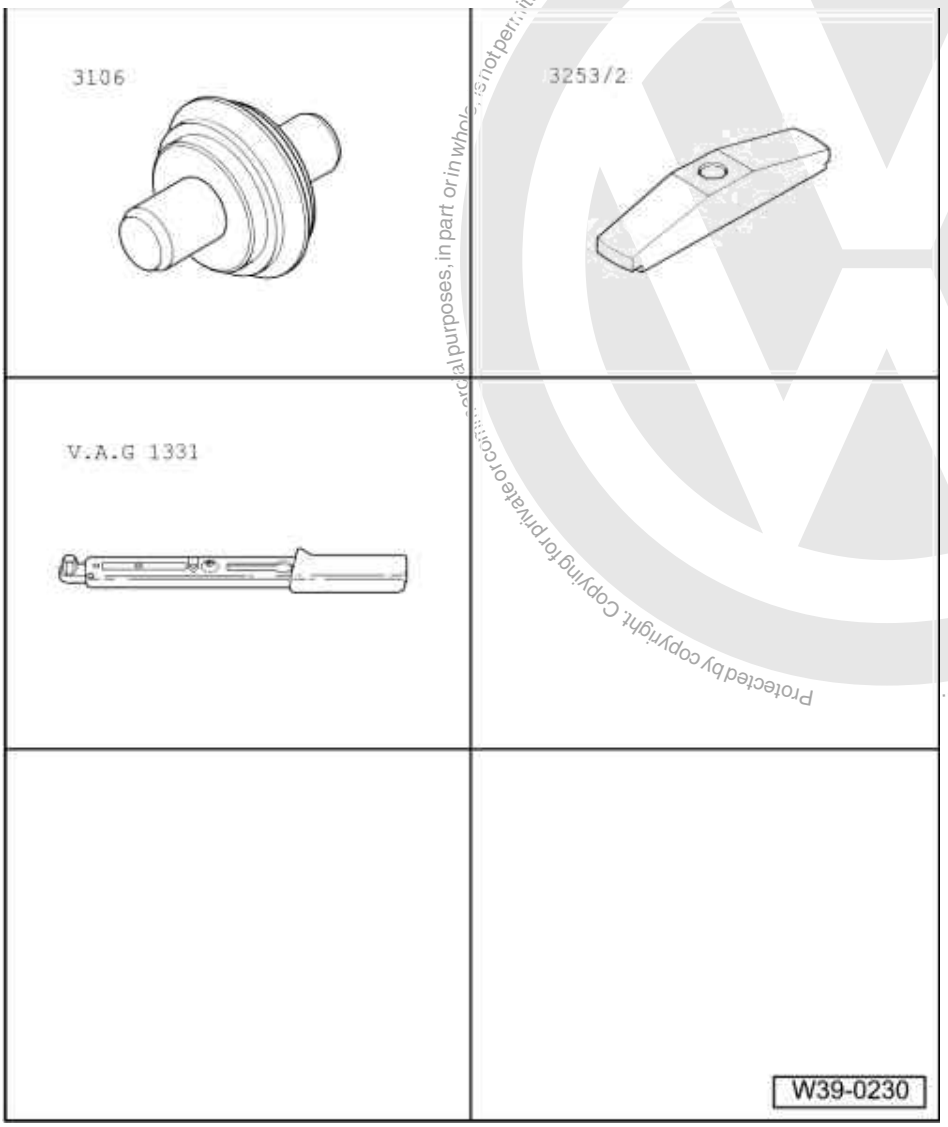

Special tools and workshop equipment required

- 3106 Drift
- 3253/2 Fitting tool
- V.A.G 1331 Torque wrench

Removing

- Remove insulation tray below engine/gearbox, if fitted.
- Turn steering to right onto full lock stop.

Protected by copyright. Copying for private or commercial purposes, in part or in whole, is not permitted unless authorised by Volkswagen AG. Volkswagen AG does not guarantee or accept any liability with respect to the correctness of information in this document. Copyright by Volkswagen AG.
satelettronica

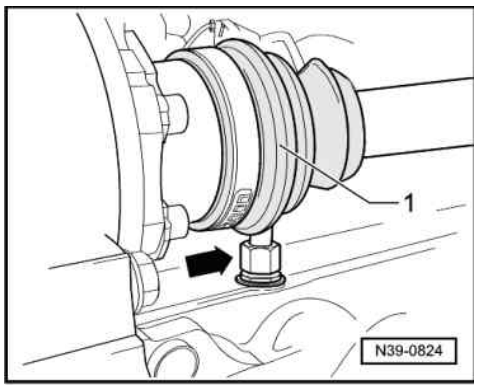

- Remove drive shaft protective cap from engine, if fitted.
- -> Disconnect drive shaft -1- from flanged shaft.
- Tie-up drive shaft as high as possible. Do not damage paint on drive shaft.
- Place container under gearbox and engine.
- Disconnect oil return pipe/hose for turbocharger at engine (arrow).

=> Repair group 21; Charge air system for turbocharger; Removing and installing turbocharger with attached components Charge air system for turbocharger Removing and installing turbocharger with attached components

- Remove flanged shaft securing bolts, to do this screw two bolts into the flange and counterhold flanged shaft using a lever.
- Remove flanged shaft with spring.

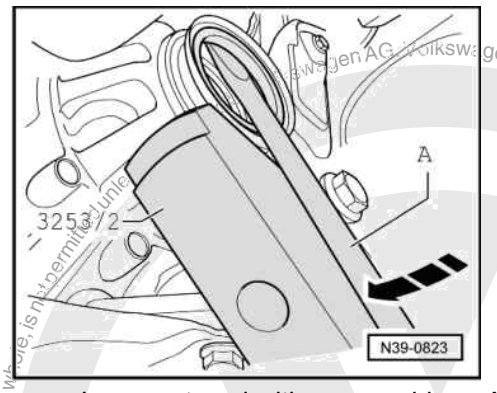

- -> Lever out seal with a screwdriver -A-, support screwdriver on fitting tool 3253/2.

Notes:

- Do not damage sleeve, otherwise leaks will occur.
- Replace sleeve if damaged
  => Page 106 .

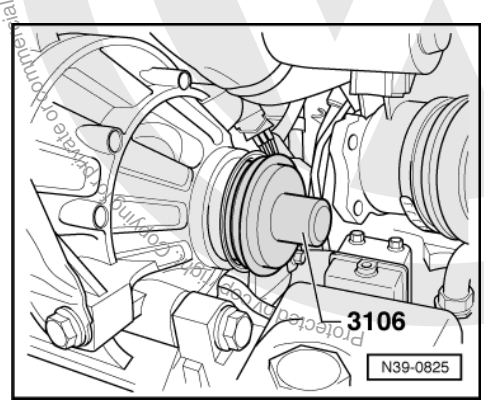

Volkswagen AG does not guarantee or accept any liability with respect to the correctness of information in this document. Copyright by Volkswagen AG.
Protected by copyright. Copying for private or commercial purposes, in part or in whole, is not permitted unless authorised by Volkswagen AG.
satelettronica

Installing

- -> Drive new seal in onto stop, do not cant seal when doing this.
- Fill space between sealing lip and dust lip with grease G 052 128 A1.
- Insert flanged shaft.
- Secure flange shaft with countersunk bolt.

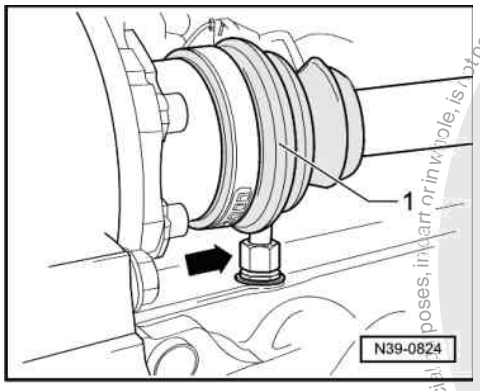

- -> Fit turbocharger oil return pipe/hose to engine (arrow).

=> Repair group 21; Charge air system for turbocharger; Removing and installing turbocharger with attached components Charge air system for turbocharger Removing and installing turbocharger with attached components

- Install drive shaft -1- to flanged shaft.

=> Running gear, axles, steering; Repair group 40; Servicing drive shafts, Removing and installing drive shafts Servicing drive shafts, Removing and installing drive shafts

- Install drive shaft protective cover if necessary.
- Check gearbox oil =>Page 67 .
- Install noise insulation tray.

Tightening torques

Flanged shaft to gearbox (conical head bolt)	25 Nm
Protective cap/drive shaft to engine	35 Nm

Protected by copyright. Copying for private or commercial purposes, in part or in whole, is not permitted unless authorised by Volkswagen AG. Volkswagen AG does not guarantee or accept any liability with respect to the correctness of information in this document. Copyright by Volkswagen AG.
satelettronica

2 - Dismantling and assembling differential

2.1 - Dismantling and assembling differential

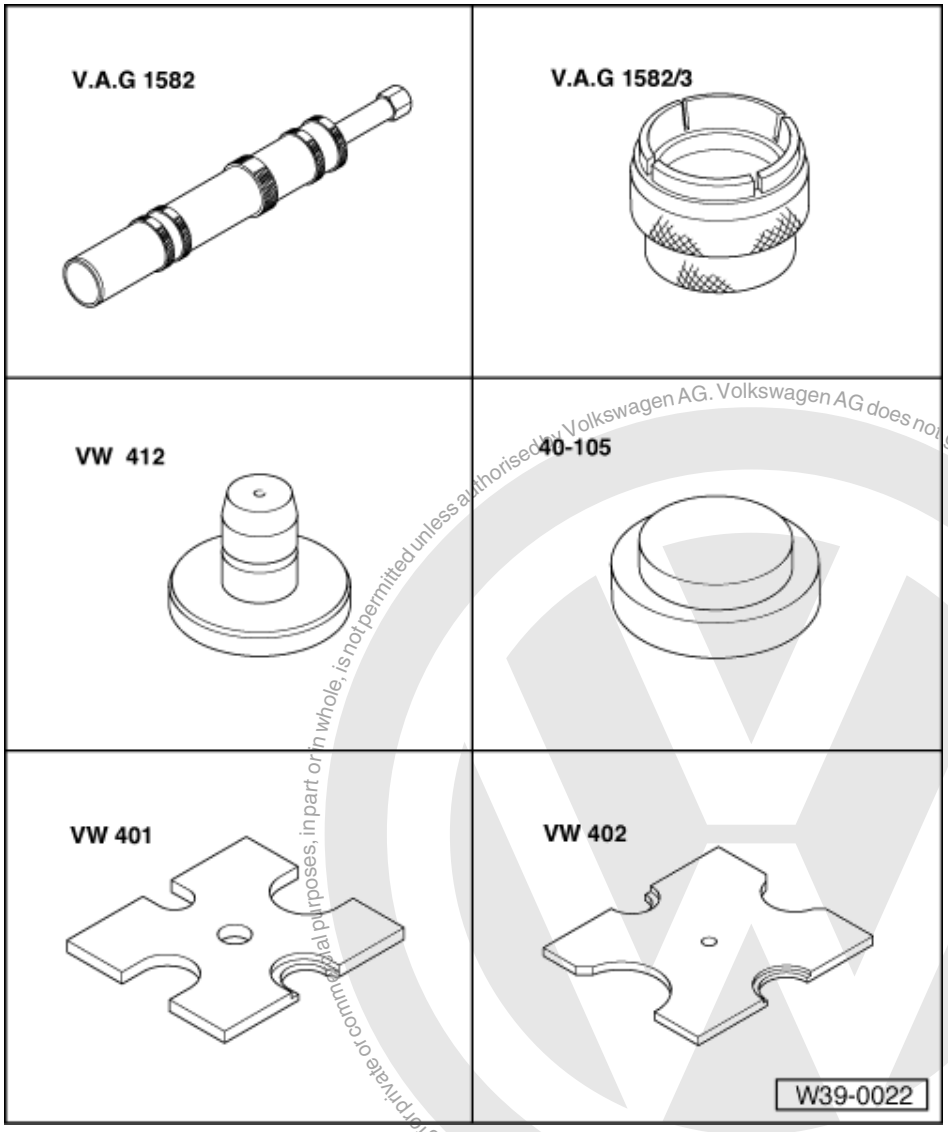

Special tools and workshop equipment required

- V.A.G 1582 Puller
- V.A.G 1582/3 Grip
- VW 412 Press tool
- 40-105 Thrust plate
- VW 401 Thrust plate
- VW 402 Thrust plate

Protected by copyright. Copying for private or commercial purposes, in part or in whole, is not permitted unless authorised by Volkswagen AG. Volkswagen AG does not guarantee or accept any liability with respect to the correctness of information in this document. Copyright by Volkswagen AG.
satelettronica

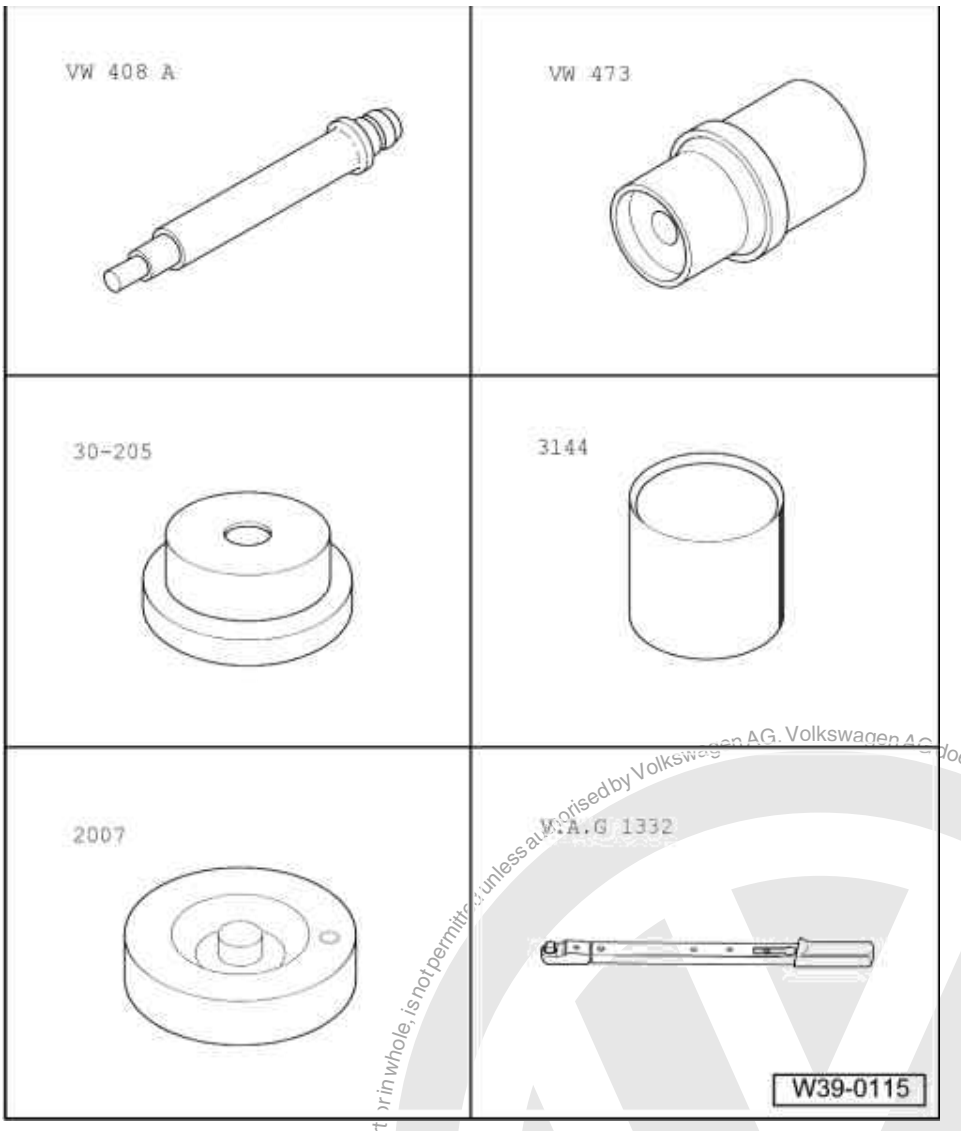

Special tools and workshop equipment required

- VW 408 A Press tool
- VW 473 Thrust piece
- 30-205 Thrust plate
- 3144 Sleeve
- 2007 Thrust pad
- V.A.G 1332 Torque wrench

Special tools and workshop equipment required

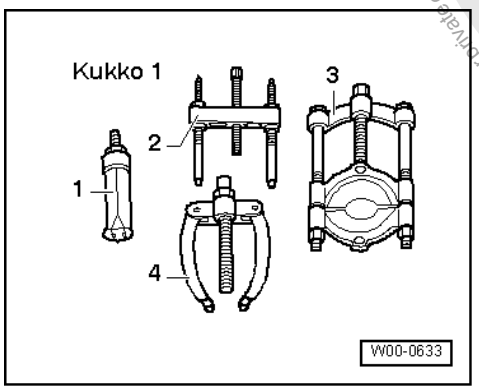

Protected by copyright. Copying for private or commercial purposes, in part or in whole, is not permitted unless authorised by Volkswagen AG. Volkswagen AG does not guarantee or accept any liability with respect to the correctness of information in this document. Copyright by Volkswagen AG.
satelettronica

- 1 - Kukko 21/7 Internal puller
- 4 - Kukko 22/2 Counter support

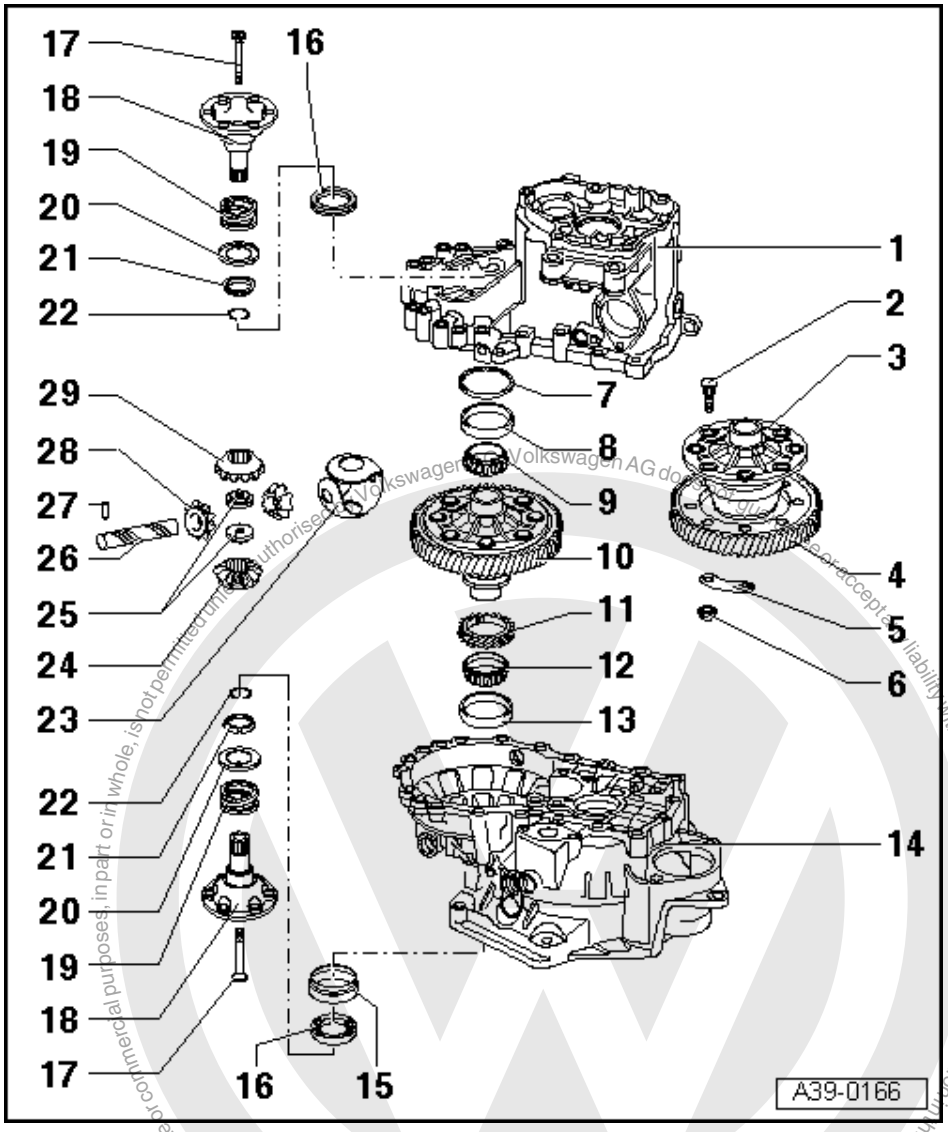

Notes:

- Heat taper roller bearing inner race to 100 °C before installing.
- Always renew both taper roller bearings together as a set.
- If differential housing, gearbox housing or clutch housing taper roller bearings are renewed adjust differential => Page 196 .

1 Gearbox housing
2 Bolt
3 Differential cage
- Bolt to final drive gear

satelettronica

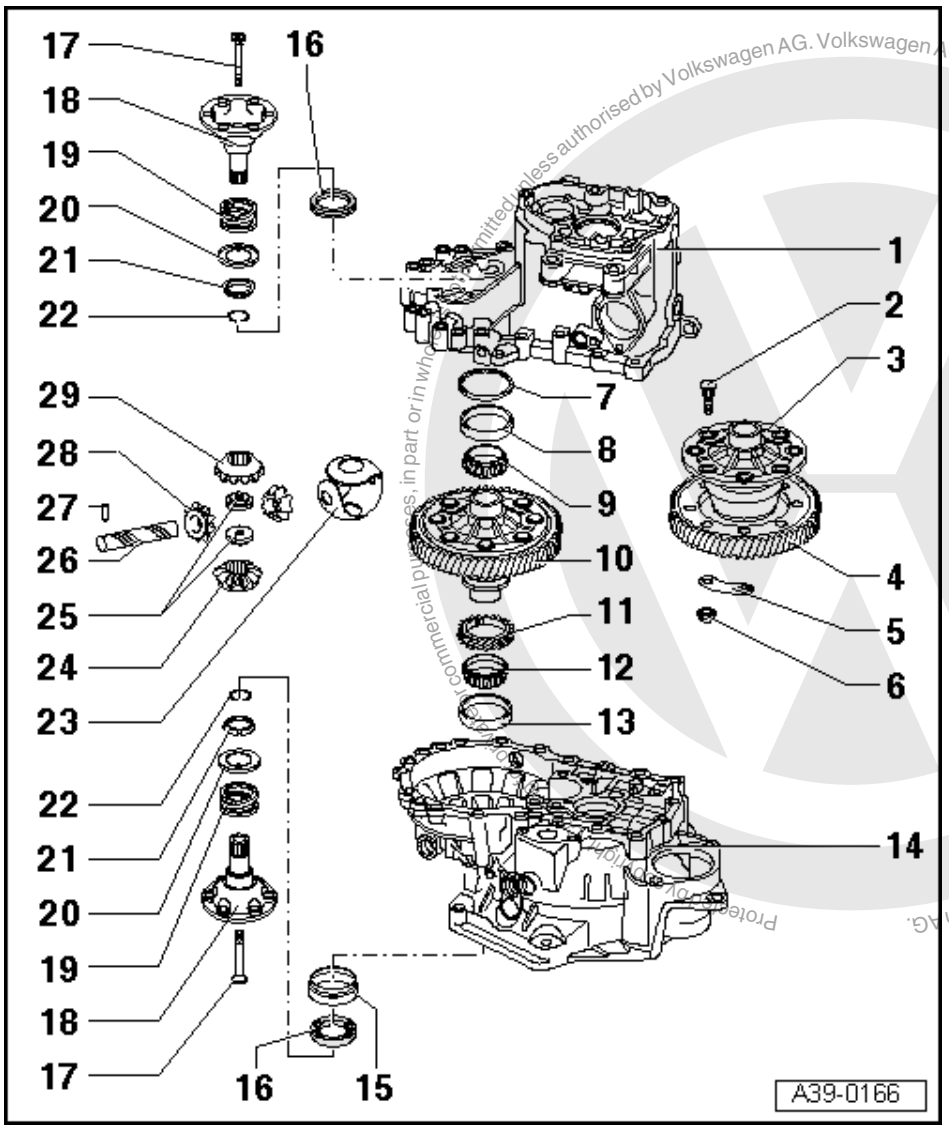

4 Final drive gear wheel
- Rivetted in production
- Is paired with output shaft, only renew as a set
- Pressing off => Fig. 8
- Installation position => Fig. 9
- Heat to 100 °C before installing
- Fit to differential housing => Fig. 10
- Bolted => Fig. 11

5 Backing plate

6 Nut, 70 Nm

7 Shim
- For differential
- Determining thickness => page 196

8 Taper roller bearing outer race
- Driving out => Fig. 5
- Pressing in => Fig. 6

satelettronica

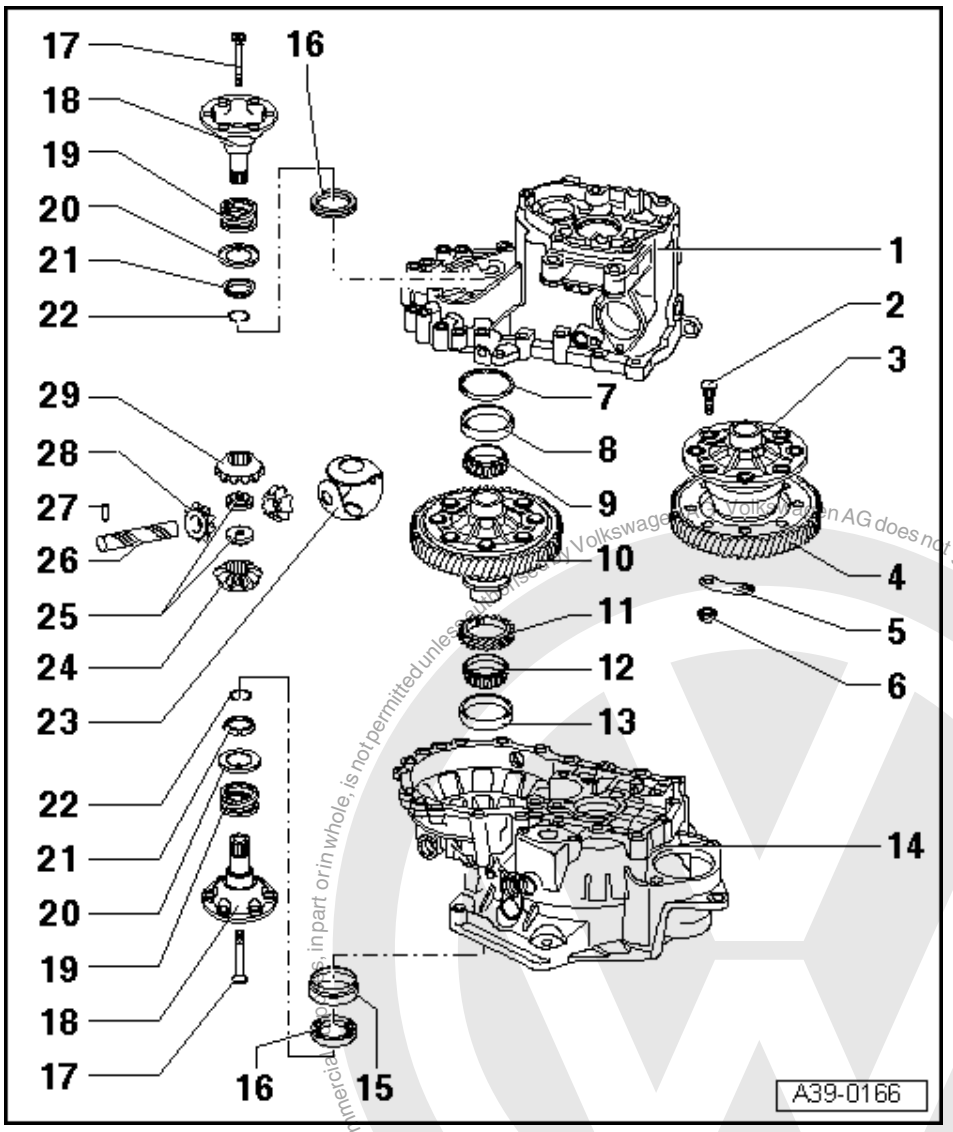

9 Taper roller bearing inner race
- Pulling off => Fig. 3
- Pressing on => Fig. 4

10 Differential housing
- With rivetted final drive gear
- When renewing final drive gear drill out rivet heads => Fig. 7
- Attaching final drive gear with bolts => Fig. 11

11 Speedometer drive wheel
- Fit onto differential housing as far as stop before pressing on inner race

12 Taper roller bearing inner race
- Pulling off => Fig. 3
- Pressing on => Fig. 4

Protected by copyright. Copying for private or commercial purposes, in part or in whole, is not permitted unless authorised by Volkswagen AG. Volkswagen AG does not guarantee or accept any liability with respect to the correctness of information in this document. Copyright by Volkswagen AG.
satelettronica

Protected by copyright. Copying for private or commercial purposes, in part or in whole, is not permitted unless authorised by Volkswagen AG. Volkswagen AG does not guarantee or accept any liability with respect to the correctness of information in this document. Copyright by Volkswagen AG.

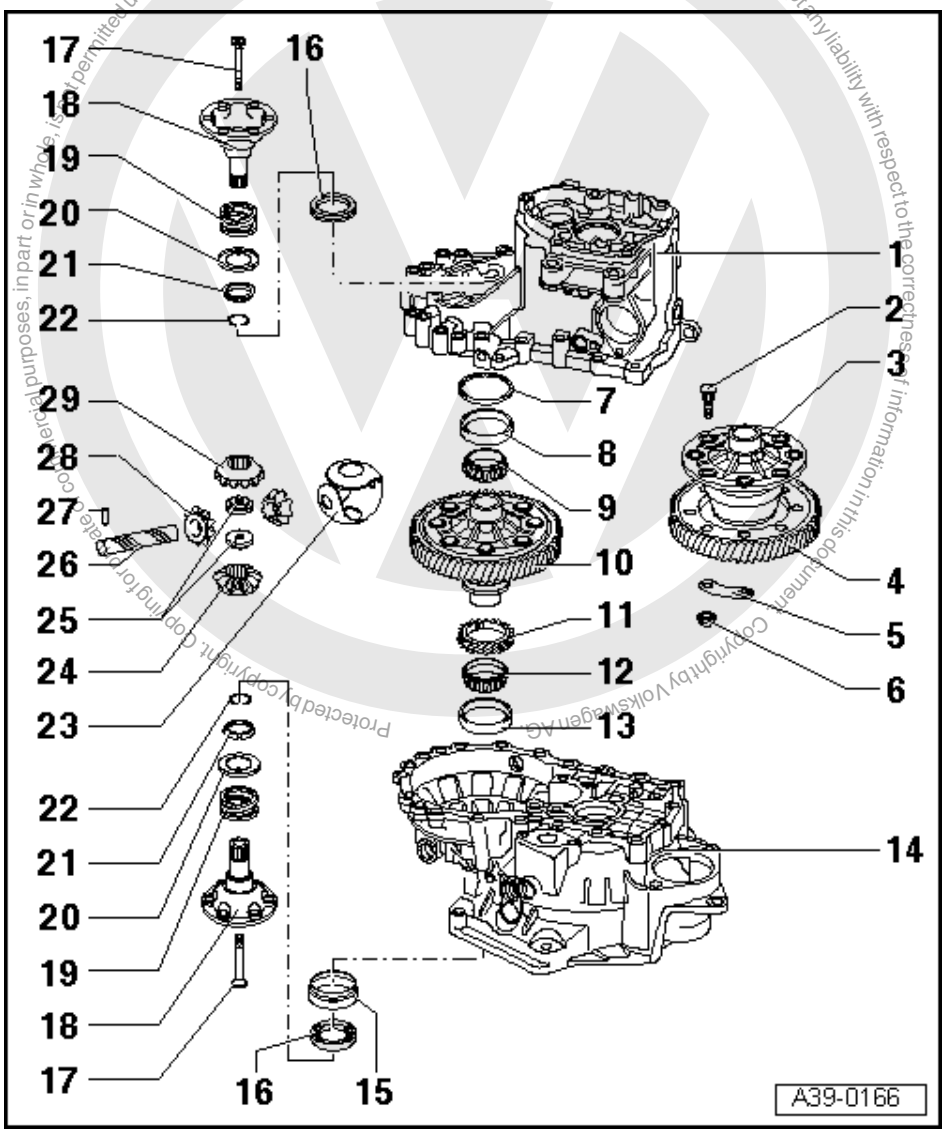

13 Taper roller bearing outer race
- Pressing out => Fig. 1
- Pressing in => Fig. 2

14 Clutch housing

15 Sleeve
- To accept oil seal (item 16)
- Removing and installing
  => Page 106

16 Oil seal
- Renewing with gearbox installed => page 176

17 Counter-sunk head bolt, 25 Nm
- Bolt into threaded piece (item 25)

18 Flange shaft
- Removing and installing
  => Page 176

satelettronica

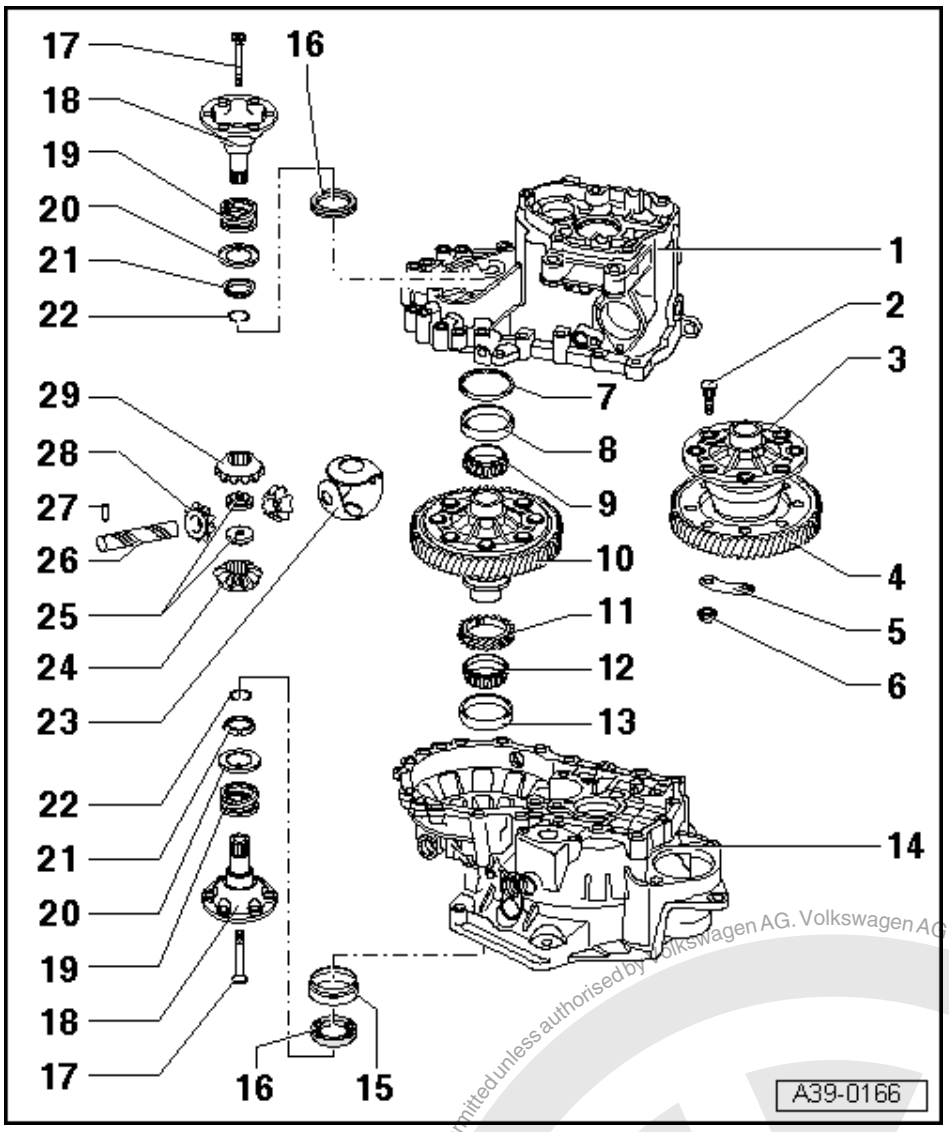

19 Spring for flanged shaft
- Installed behind flanged shafts

20 Thrust washer
- Installation position:
  Shoulder towards spring, tongue to tapered ring

21 Tapered ring
- With grooves to secure thrust washer
- Installation position: Taper towards differential housing

22 Securing clip
- Ensures that taper ring, thrust washer and spring are held in position when flange shaft is removed

23 One-piece thrust washer
- Coat with gearbox oil when installing

Protected by copyright. Copying for private or commercial purposes, in part or in whole, is not permitted unless authorised by Volkswagen AG. Volkswagen AG does not guarantee or accept any liability with respect to the correctness of information in this document. Copyright by Volkswagen AG.
satelettronica

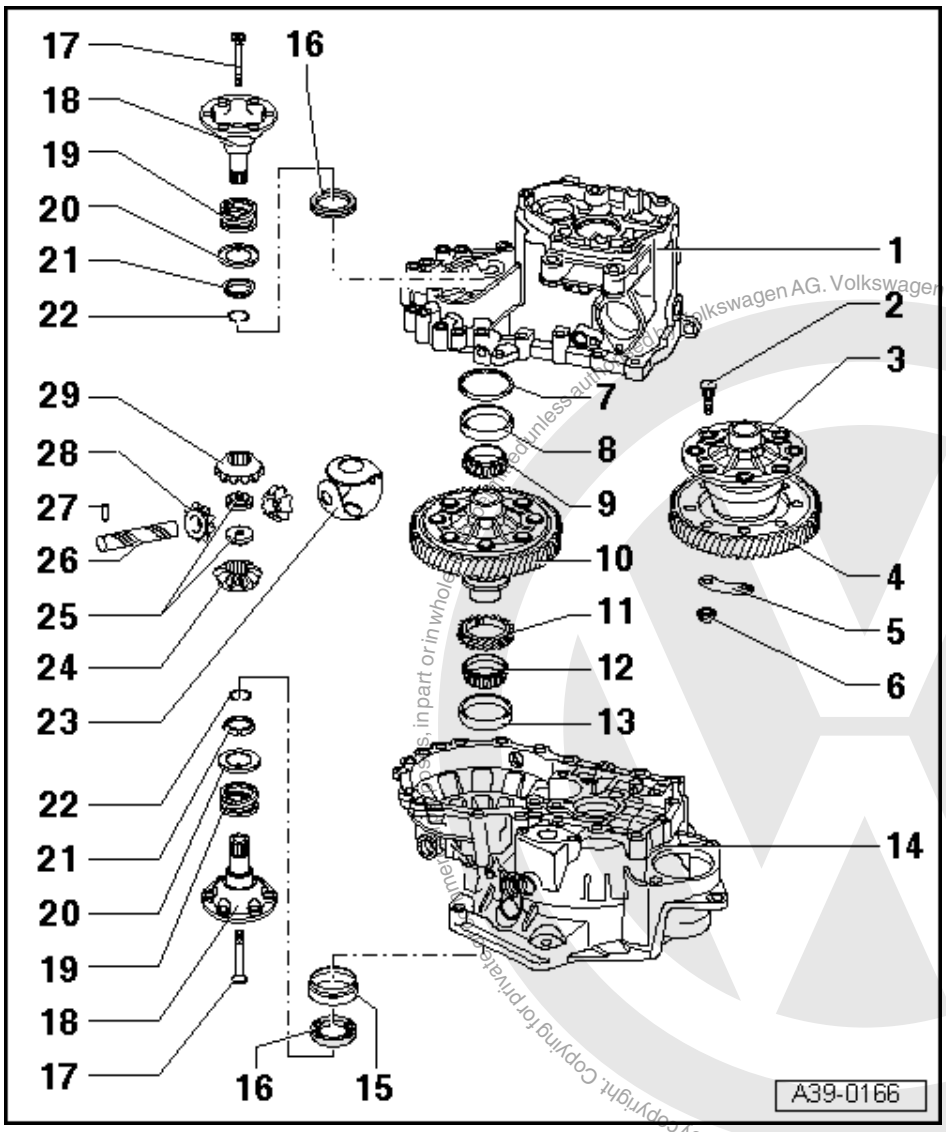

24 Sun wheel
- Installing => Fig. 13

25 Threaded piece
- Installing => Fig. 13

26 Planet pinion axis shaft
- Knock out with drift
- Installing => Fig. 13

27 Spring pin
- For securing planet pinion axis shaft
- Removing and installing => Fig. 12

28 Planet pinion
- Installing => Fig. 13

29 Sun wheel
- Installing => Fig. 13

Protected by copyright. Copying for private or commercial purposes, in part or in whole, is not permitted unless authorised by Volkswagen AG. Volkswagen AG does not guarantee or accept any liability with respect to the correctness of information in this document. Copyright by Volkswagen AG.
satelettronica

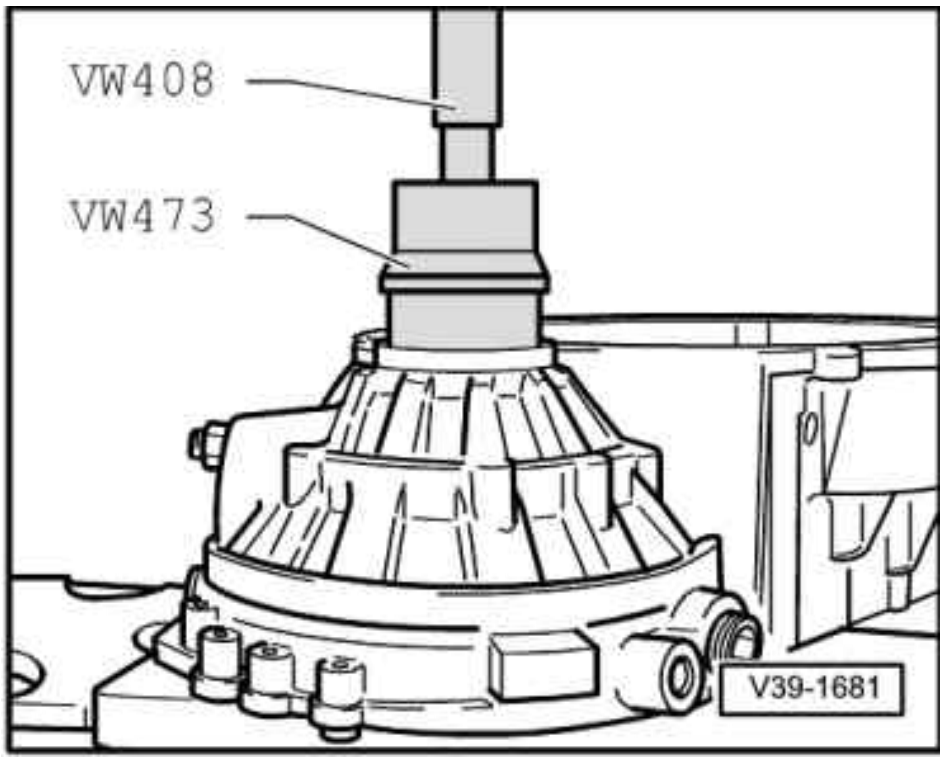

-> Fig.1 Pressing taper roller bearing outer race out of clutch housing

- First remove flange shaft seal mounting sleeve.

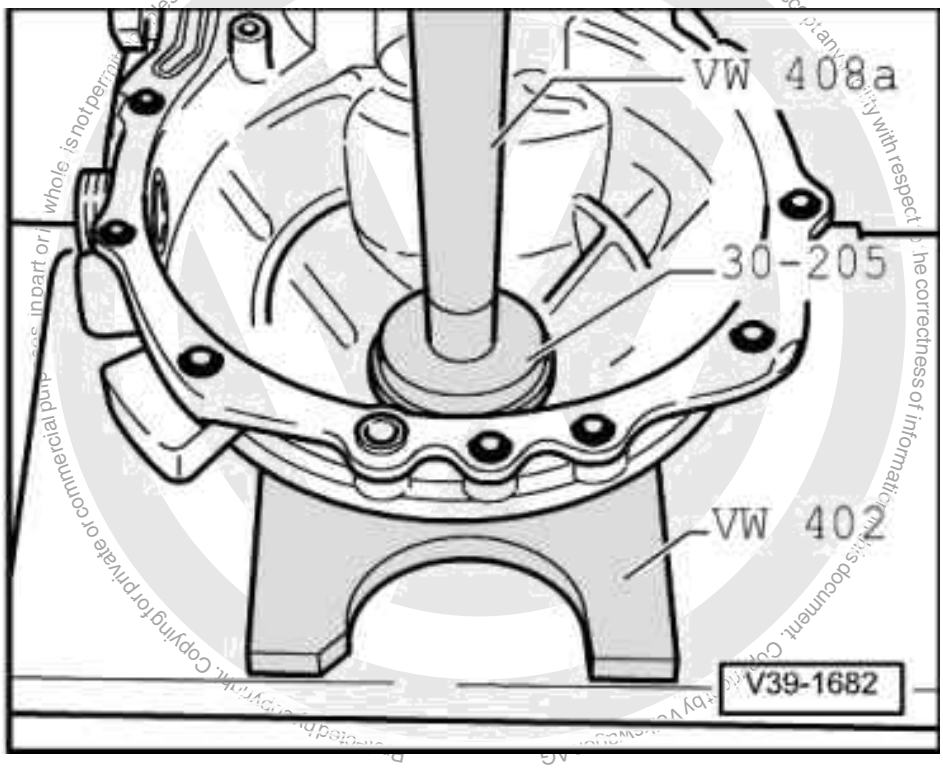

satelettronica

-> Fig.2 Pressing taper roller bearing outer race into clutch housing

No shim is installed in the clutch housing end.

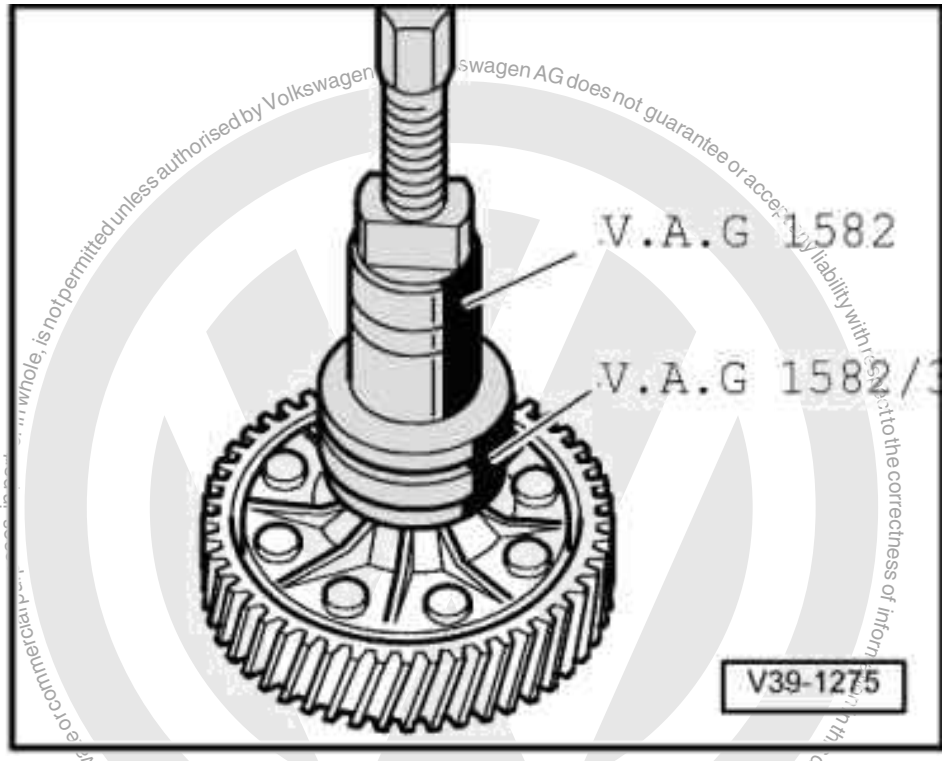

-> Fig.3 Pulling off taper roller bearing inner race

- Before fitting the extractor position press piece 40-105 on differential housing.

Note:

Both both taper roller bearing inner races are pulled off the differential housing in the same way.

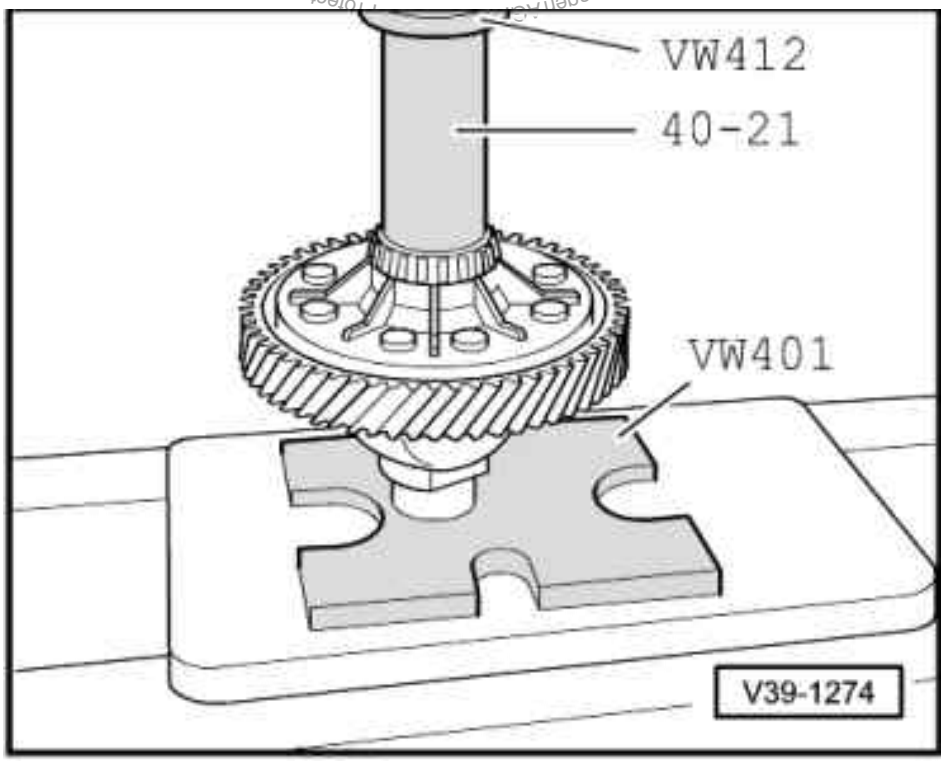

satelettronica

-> Fig.4 Pressing on taper roller bearing inner race

Note:

The taper roller bearing inner races for gearbox housing and clutch housing are pressed on with the same press tools.

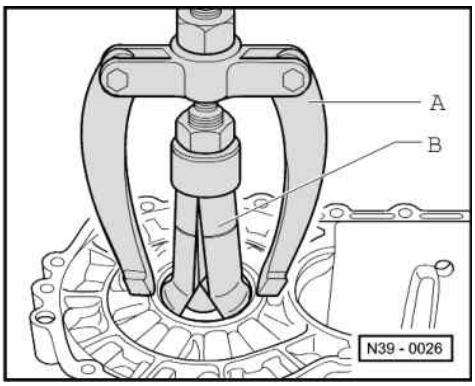

-> Fig.5 Pulling taper roller bearing outer race out of gearbox housing

A - Counter support, e.g. Kukko 22/2

B - Internal puller 46...58 mm, e.g. Kukko 21/7

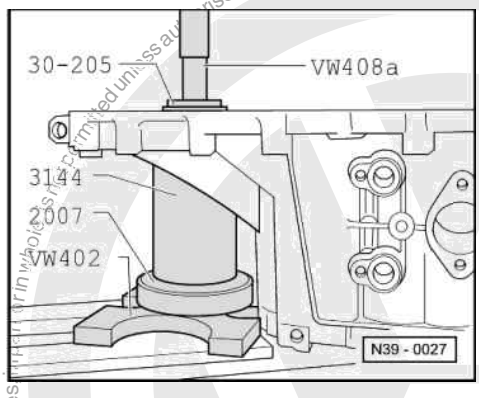

-> Fig.6 Pressing taper roller bearing outer race into gearbox housing

- Fit shim under outer race.
- Support gearbox housing with sleeve 3144 directly below bearing mounting.

Protected by copyright. Copyright for private or commercial purposes, in part or in whole is not permitted unless authorised by Volkswagen AG. Volkswagen AG does not guarantee or accept any liability with respect to the correctness of information in this document. Copyright by Volkswagen AG.
satelettronica

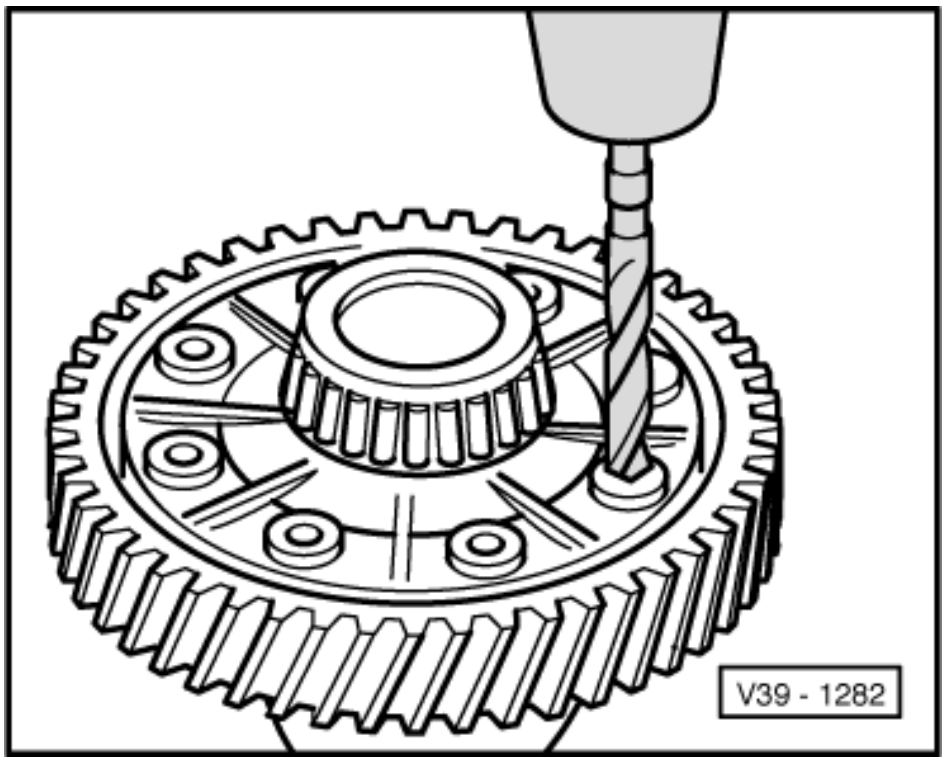

-> Fig.7 Drilling out rivet heads
- Drill out rivet heads with 12 mm drill from countersunk side and knock-out with drift.

Note:
Clean differential before and after drilling, protect taper roller bearing from drillings.

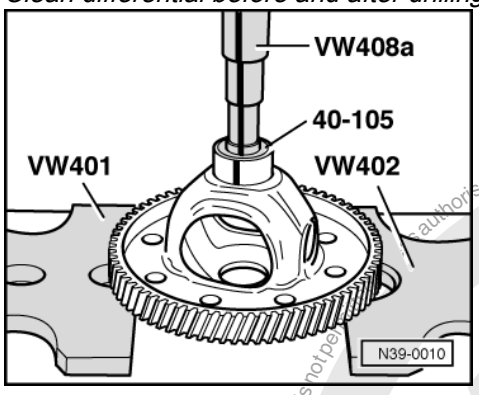

-> Fig.8 Pressing off final drive gear
- Place thrust piece 40-105 on differential housing.

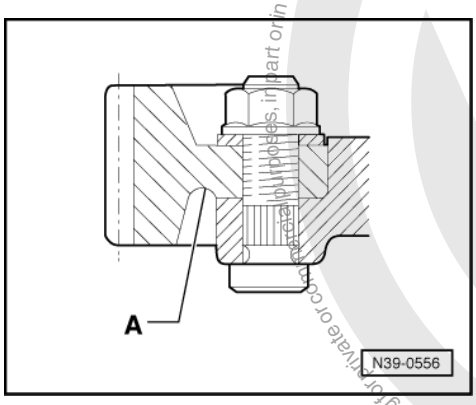

satelettronica
Protected by copyright. Copying for private or commercial purposes, in part or in whole, is not permitted unless authorised by Volkswagen AG. Volkswagen AG does not guarantee or accept any liability with respect to the correctness of information in this document. Copyright by Volkswagen AG.

-> Fig.9 Installation position of final drive gear wheel

The circular groove -A- faces towards bolt-on side of differential.

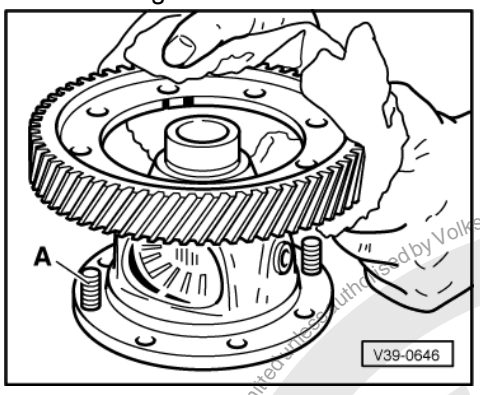

-> Fig.10 Heating final drive gear wheel to approx. 100 °C and installing

- Use bolts -A- from repair kit to guide final drive gear into position during installation.

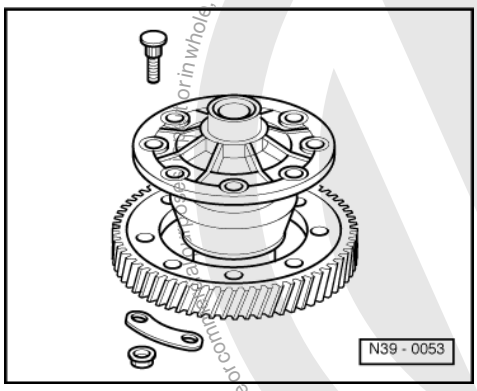

-> Fig.11 Bolting final drive gear and differential housing together

Use special bolts with plates and nuts according to parts catalogue.

Protected by copyright. Copying for private or commercial purposes, in part or in whole, is not permitted unless authorised by Volkswagen AG. Volkswagen AG does not guarantee or accept any liability with respect to the correctness of information in this document. Copyright by Volkswagen AG.
satelettronica

-> Fig.12 Removing and installing planet wheel axis shaft spring pin

Removing

- Cover taper roller bearing inner race and speedometer drive gear to avoid possible damage and ingress of metal particles.
- Knock-out spring pin with chisel, inserting chisel into circumferential groove.

Installing

- Knock fully into the differential cage.

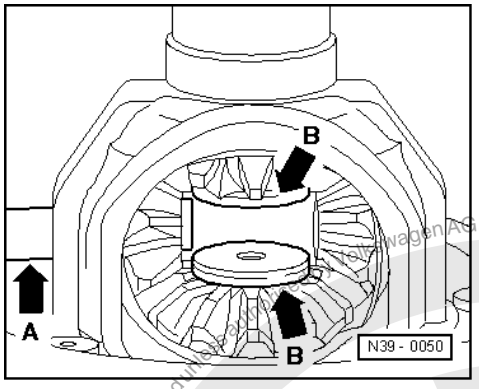

-> Fig.13 Installing sun wheels and planet pinions

- Lubricate one piece thrust washer with gearbox oil and install.
- Install both sun wheels and secure (e.g. with flanged shaft).
- Insert planet wheels (180°apart) and pivot into position.
- Push planet wheel axis shaft (arrow -A-) in until first planet wheel.
- Position threaded pieces (arrow -B-) in sun wheels
  Installation position: step towards sun wheel
- Drive planet wheel axis shaft into final position and secure with spring pin.

3 - Adjustment overview

3.1 - Adjustment overview

Note:

If repairs have been carried out to the gearbox it is only necessary to adjust the input shaft, output shaft or differential if components have been renewed which have a direct effect on the adjustment of the gearbox. Refer to the following table to avoid unnecessary adjustment:

		to be adjusted:		
		Input shaft => Page 133	Output shaft => Page 168	Differential => Page 196
Parts renewed:	Gearbox housing	x		x
	Clutch housing	x	x	x
	Input shaft	x		
	Output shaft (final drive)		x	
	Differential housing			x
	Input shaft taper roller bearing	x		
	Output shaft taper roller bearing		x	

Protected by copyright. Copyright by Volkswagen AG. Volkswagen AG does not guarantee or accept any liability with respect to the correctness of information in this document. Copying for private or commercial purposes, in part or in whole, is not permitted unless authorised by Volkswagen AG.
satelettronica

Differential taper roller bearing			x
4th gear wheel	x		

4 - Adjusting differential

4.1 - Adjusting differential

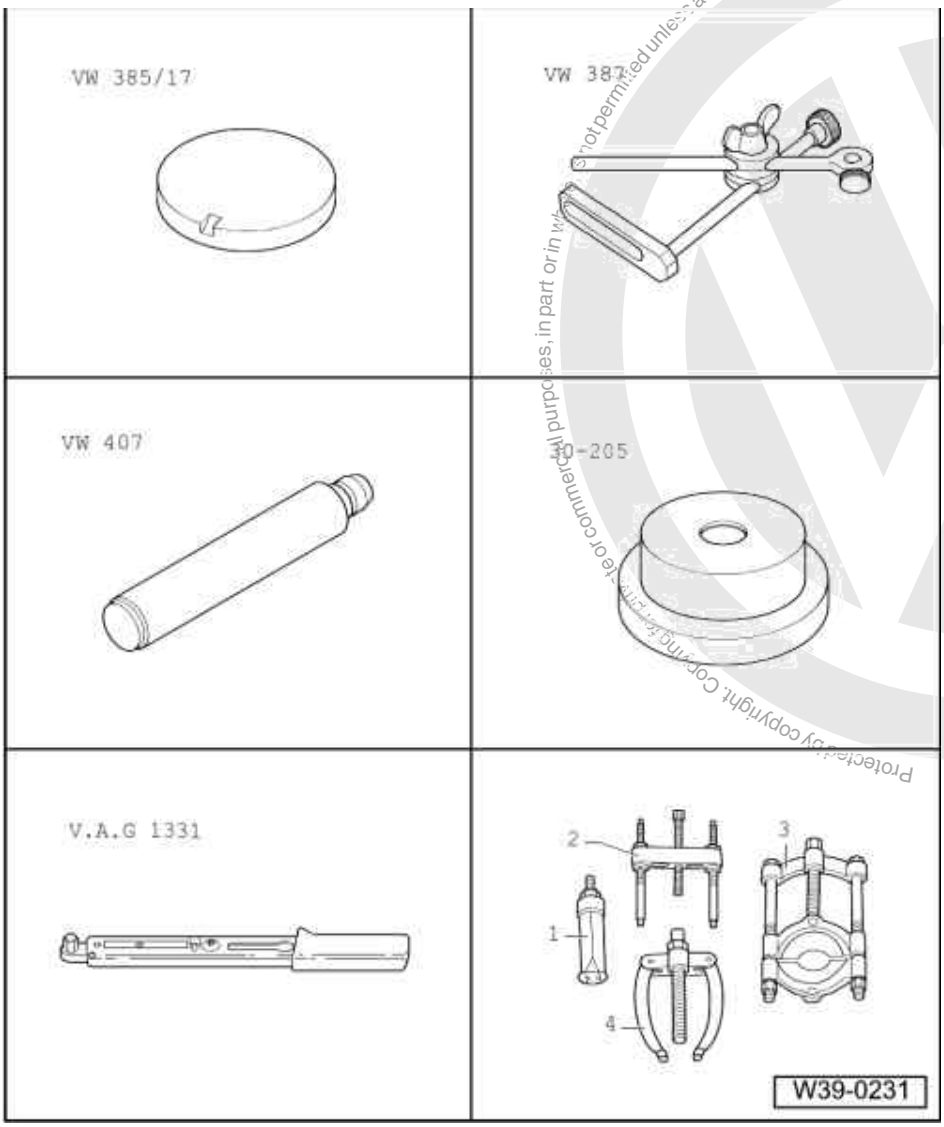

Special tools and workshop equipment required

- VW 387 Universal dial gauge bracket
- VW 385/17 End measuring plate
- 30-205 Thrust plate
- VW 407 Press tool
- V.A.G 1331 Torque wrench
- 1 - Kukko 21/7 Internal puller
- 4 - Kukko 22/2 Counter support
- Dial gauge

The differential must be adjusted, when

Protected by copyright. Copying for private or commercial purposes, in part or in whole, is not permitted unless authorised by Volkswagen AG. Volkswagen AG does not guarantee or accept any liability with respect to the correctness of information in this document. Copyright by Volkswagen AG.
satelettronica

- Gearbox housing
- Clutch housing
- Differential housing

or the

- Differential taper roller bearing

have been renewed.

Adjustment overview => Page 195 .

- Press taper roller bearing outer race into clutch housing using thrust plate 30-205 => Page 191 .

Note:

Taper roller bearing inner and outer races are paired. Do not interchange!

- Press taper roller bearing outer race without shim into the gearbox housing using thrust piece 30-205 => Page 192 .
- Insert differential into clutch housing.

- Fit gearbox housing and tighten 5 bolts to 25 Nm.

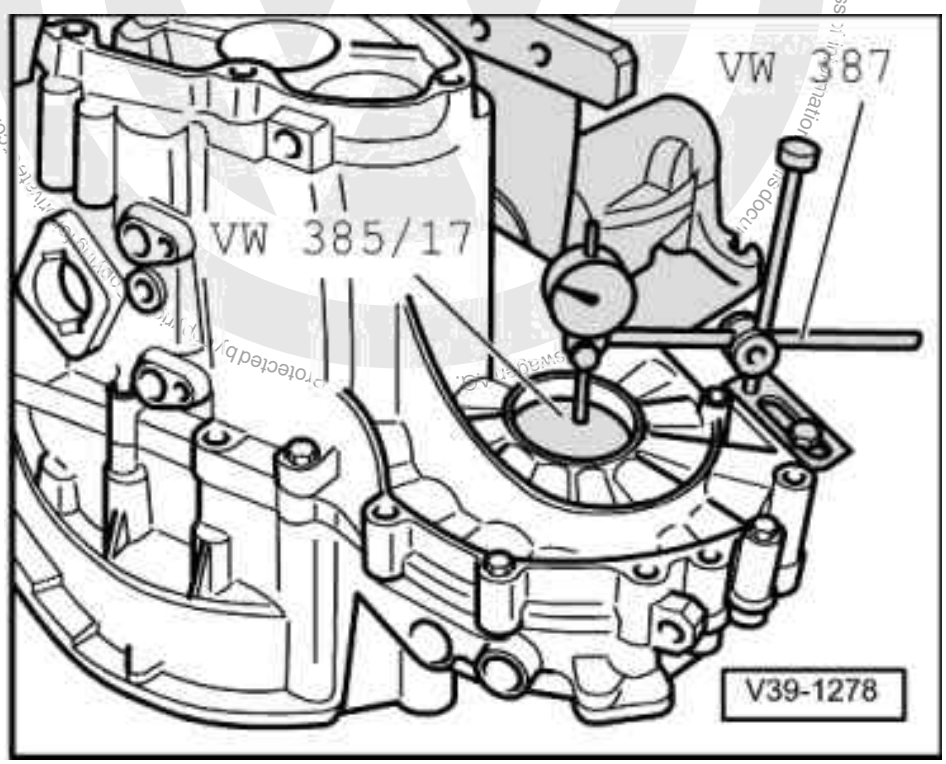

- -> Mount dial gauge and "0" with 1 mm preload.
- Move differential up and down and recall play indicated on dial gauge (Example: 0.70 mm)

Determining shim thickness

The specified bearing preload is obtained by adding a constant figure (0.40 mm) to the reading obtained.

Example:

Reading	0.70 mm
+ Preload (constant figure)	0.40 mm

Volkswagen AG. Volkswagen AG does not guarantee or accept any liability with respect to the correctness of information in this document. Copyright by Volkswagen AG. Protected by copyright. Commercial purposes, in part or in whole, is not permitted unless authorised by Volkswagen AG.
satelettronica

Thickness of shim =	1.10 mm

- Remove gearbox housing and pull taper roller bearing outer race out from gearbox housing => Page 192 .
- Insert shims of correct thickness, thickest shim first.

The following shims are available:

Size (mm)	Part No.
0.65	02A 409 210
0.70	02A 409 210 A
0.75	02A 409 210 B
0.80	02A 409 210 C
0.85	02A 409 210 D
0.90	02A 409 210 E
0.95	02A 409 210 F
1.05	02A 409 210 G
1.05	02A 409 210 H
1.10	02A 409 210 J
1.15	02A 409 210 K
1.20	02A 409 210 L
1.25	02A 409 210 M

If the size of shim required is larger than that listed in the table, insert two shims totalling the correct figure.

Varying tolerances make it possible by measuring the shims to obtain the exact shim thickness required.

- Press outer race in again and tighten gearbox housing.

Protected by copyright. Copying for private or commercial purposes, in part or in whole, is not permitted unless authorised by Volkswagen AG. Volkswagen AG does not guarantee or accept any liability with respect to the correctness of information in this document. Copyright by Volkswagen AG.

satelettronica